Return to Index

EPA Information Request Response

1. In the second paragraph of Section 3 on page 8 of the application, there is a statement to the effect that all emissions other than those from the generator engines are fugitive particulate matter emissions from crushing, screening, material transfer, storage piles, and roadways that are not included in facility-wide emissions compared to the Title V major source thresholds because the facility operations are not a listed category of stationary source. While it is true that fugitive emissions are not counted towards Title V applicability, EPA does not consider particulate matter emissions from crushing, screening or most material transfers to be fugitive emissions. Particulate matter emissions caused by road traffic, large piles and material transfers from trucks or front-end loaders are activities at your facility that can be considered fugitive emissions. Revise the application text to reflect this fact.

   The permit application text has been updated to reflect this request, the updated application document is included as Attachment 1.

2. In the potential to emit tables of the application, present all of the non-fugitive particulate matter emissions.

   The permit application tables have been updated to include the non-fugitive particulate matter emissions. An updated Appendix B – Detailed Emissions is included as Attachment 2.

3. List, describe and label with emission unit identification numbers or codes all of the crushers, screens and conveyance systems for ease of reference in the permit. Include all of the equipment in the process flow diagrams included with the application. Denote where water sprays for dust control are used and where water is otherwise added to the process for wet processing, also noting whether the water sprays are required.

Emission Source	Unit Number	Description	Emissions	Emission Controls
Crusher Plant				
Jaw Crusher	3-10-24	Mfr: Cedar Rapids Serial No. (SN): 444117 Mfr Date: June 1991 Capacity: 300-500 TPH 2400-4000 TPD	PM, PM_{10}, $PM_{2.5}$	BMPs
Crusher Screen	3-11-30	Mfr: Cedar Rapids SN: 48103 Mfr Date: 1996 Capacity: 500 TPH 4000 TPD	PM, PM_{10}, $PM_{2.5}$	BMPs, water sprays

Emission Source	Unit Number	Description	Emissions	Emission Controls
		Design: 3 Decks		
Twin Screen #1 & #2	3-11-31	Mfr: JCI Twin Screen SN: 5051555 Mfr Date: 2004 (2) Throughput: 71.6% of Crusher Screen (3) Throughput: 66% of Twin Screen 1 Design: 3 Decks	PM, PM_{10}, $PM_{2.5}$	BMPs, water sprays
Standard Cone Crusher	3-10-22	Mfr: 4-1/4 Symons SN: 41109 Mfr Date: unknown Capacity: 236-358 TPH 1888-2864 TPD (depending on material)	PM, PM_{10}, $PM_{2.5}$	BMPs, water sprays
Shorthead Cone Crusher	3-10-15	Mfr: Noberg 400 SN: 400302 Mfr Date: February 2000 Capacity: 209-336 TPH (depending on material)	PM, PM_{10}, $PM_{2.5}$	BMPs, water sprays
Stackers (2)		n/a – conveyor drops to pile storage	PM, PM_{10}, $PM_{2.5}$	BMPs
Generator Engine	3-18-21	Mfr: Caterpillar 3512 SN: 024Z07632 Mfr Date: 1996 Electrical Rating: 1250ekW Engine Rating: 1675 bhp Fuel: Ultra-Low Sulfur Diesel (ULSD)	Diesel combustion products	No controls
Wash Plant				

Emission Source	Unit Number	Description	Emissions	Emission Controls
Bin Feeder			PM, PM_{10}, $PM_{2.5}$	
Screen 1	3-16-04	Mfr: Cedar Rapids, 6 x 20 SN: unknown Mfr Date: Jan 11, 2001 Capacity: 211 TPH 1688 TPD Design: 3 Decks	PM, PM_{10}, $PM_{2.5}$	
Stackers (4)		n/a – converyor drops to pile storage	PM, PM_{10}, $PM_{2.5}$	
Engine Generator	3-18-19	Mfr: Caterpillar 3406 SN: 2WB17130 Mfr Date: 1996 Electrical Rating: 350 ekW Engine Rating:469 bhp Fuel: Ultra-Low Sulfur Diesel (ULSD)	Diesel combustion products	No controls

The facility is subject to the fugitive emission standards in 40 CFR Part 60 Subpart OOO - Standards of Performance for Nonmetallic Mineral Processing Plants. The Subpart does not stipulate any specific type of controls that are required. JK Merrill employs wet suppression on some of the Crushing Plant equipment, as specified above. Attachment 3 includes source test results for the facility demonstrating compliance with the applicable standards. In accordance with 40 CFR 60.674 and Table 3 of the subpart, there are no ongoing monitoring requirements for wet suppression systems for facilities constructed before April 22, 2008.

4. On the facility site plan in Figure 2 of the application, clarify whether both generators are located in the same location or add the second generator to the site plan.

   The permit application has been updated to include the location of both engine generators.

5. For the generators, provide copies of all past emission test results (full reports if available). If none are available, provide any emission information from the manufacturer that is available.

   A source test was performed on the two generators in 2018, the source test report is attached. Emission calculations are based on EPA's AP-42 emission factor document for diesel engines, except for carbon monoxide which are based on the oxidation system guarantee. Documentation for the previous source test and the oxidation system are included as Attachment 3.

6. Include a complete emission inventory of hazardous air pollutants.

   An updated Appendix B Detailed Emissions is included as Attachment 2. The only sources of HAP emissions are the engines, please see the engine calculations for the total HAPs emissions.

7. For sulfur dioxide potential emissions from the generators, use the most stringent applicable fuel sulfur content limits (e.g. in the Federal Rules for Reservations or other applicable requirements). If the resulting potential to emit sulfur dioxide is greater than 100 tons per year, JK Merrill can propose using the Ultra-Low Sulfur Diesel that is in the inventory submitted.

   The two generator engines are subject to the requirements in 40 CFR 63 Subpart ZZZZ - National Emissions Standards for Hazardous Air Pollutants for Stationary Reciprocating Internal Combustion Engines. In accordance with 40 CFR 63.6604(a), existing non-emergency CI stationary engines with a site rating of more than 300 horsepower (hp) must use diesel fuel that meets the requirements in 40 CFR 80.510(b) for nonroad diesel fuel, which is ULSD.

8. For all pollutants (in addition to NOx) with the potential to be emitted above the major source thresholds for Title V, propose synthetic minor limits and associated testing, monitoring , recordkeeping and reporting.

   The facility does not emit any other pollutants above major source thresholds, as presented in the updated facility-wide emissions tables in the permit application and the updated Appendix B (Attachments 1 and 2).

9. Provide the manufacturer and model of the non-resettable fuel meters and the date the meters will be (or were) installed on the generators. Also, provide the related quality assurance and quality control procedures for the non-resettable fuel meters.

   JK Merrill has retained Leonard Petroleum Equipment of Idaho Falls to install the non-resettable hour meters for the two generators. Installation is planned for this month. At this time, the specific make and model has not been provided to JK Merrill but that information will be provided to EPA once it is available. JK Merrill will follow the operation and maintenance procedures and quality assurance instructions provided by the manufacturer and Leonard Petroleum Equipment.

10. On what date was the originally-signed written application mailed to EPA Region 10?

    The application was mailed to EPA with certified mail on July 1, 2020.

Attachment 1

Updated Synthetic Permit Application Narrative

Prepared for:

J.K Merrill and Sons, Inc.
Pocatello, Idaho

Prepared by:

Ramboll
Lynnwood, Washington

Date

July 2020 – Updated September 2020

Project Number:
1690017212

SYNTHETIC MINOR PERMIT LIMIT APPLICATION

J.K. MERRILL PIT ROCK CRUSHING PLANT

RAMBOLL

CONTENTS

1. Introduction 2

2. Facility Description 4

2.1 Emissions Description 6

3. Proposed Synthetic Limit Description 8

3.1 Proposed Facility-Wide NO_X Emission Limit 8

3.2 NO_X Emissions Calculations 8

3.3 Proposed Compliance Methods for Synthetic Minor Limit 10

TABLES

Table 1. Facility-Wide Criteria Pollutant Emissions 9

Table 2. Facility-Wide NO_X Emissions 10

FIGURES

Figure 1. Facility Location 4

Figure 2. Facility Site Plan 5

Figure 3. Process Flow Diagram 6

APPENDICIES

Appendix A: EPA Synthetic Minor Permit Application Forms

Appendix B: Detailed Emission Calculations

1. INTRODUCTION

J.K. Merrill and Sons, Inc. (JK Merrill and Sons), owns and operates a rock crushing facility at Merrill Pit located at 1850 Tank Farm Road near Pocatello, Idaho. The facility is located on the Fort Hall Indian Reservation within Environmental Protection Agency (EPA) Region 10 jurisdiction.

The facility consists of a Crusher Plant and a Wash Plant. Emissions from the Rock Crusher Plant include fugitive particulate matter (PM) from the crusher, material screening and handling, and material stockpiles, and emissions from one 1,675 horsepower (hp) diesel-fueled generator engine (Caterpillar model 3512, manufactured in 1996). The Wash Plant contains wet processes with no process emissions; however, Wash Plant operations are supported by one 469 hp diesel-fueled generator engine (Caterpillar model 3406, manufactured 1996).

On June 3, 2020, JK Merrill and Sons and EPA settled an enforcement action based on operating the two diesel-fueled generator engines without a Title V permit and for not complying with the applicable requirements of Subpart ZZZZ of the National Emission Standards for Hazardous Air Pollutants (NESHAP Subpart ZZZZ) in Title 40, Part 63 of the Code of Federal Regulations (CFR). In its review, EPA determined that operation of the two generator engines has the potential to emit oxides of nitrogen (NO_X) at levels above the Title V major source threshold of 100 tons per year (tpy). Potential emissions of all other pollutants at the facility are below Title V major source thresholds.

Under the terms of the Administrative Compliance Order on Consent Docket No. CAA-10-2020-0081 (Consent Order), JK Merrill and Sons must compile and submit a complete permit application to EPA limiting potential to emit (PTE) NO_X emissions below Title V major source threshold (100 tpy) before August 7, 2020. This application meets that requirement. Under the Consent Order, JK Merrill and Sons must also install controls and come into compliance with the requirements of NESHAP Subpart ZZZZ. JK Merrill and Sons is currently in the process of installing oxidation catalyst to comply with NESHAP Subpart ZZZZ requirements.

On behalf of J.K Merrill and Sons, Ramboll US Corporation (Ramboll) has prepared this Synthetic Minor Permit application. This application provides EPA with the information required for a complete application under the Federal Minor New Source

Review Program in Indian Country. EPA permit application forms (i.e. Form NEW and Form SYNMIN) are included in Appendix A. Detailed facility-wide emission calculations are provided in Appendix B. The remainder of this document provides a description of the proposed facility-wide NO_X limit and proposed methods of demonstrating compliance with the facility-wide NO_X limit.

2. FACILITY DESCRIPTION

The Merrill Pit rock facility produces construction-grade sand and gravel. The facility operates two diesel-fueled generator engines to support operations at the Crusher Plant and the Wash Plant. The Crusher Plant houses crushers that are used to crush large rocks into smaller pieces. The primary crusher is used to break large rocks and secondary and tertiary crushers breaks them into smaller pieces. The smaller rock pieces are sorted by size by multiple screening units. The facility store rocks and crushed rocks in stockpiles and conveyors are used to transport materials from stockpiles to crushers. The Wash Plant consist of additional screening and washing processes. The facility location and a scaled site plan of operations at the facility are provided in **Figures 1 and 2.** A process flow diagram for construction sand and gravel processing is presented in **Figure 3.**

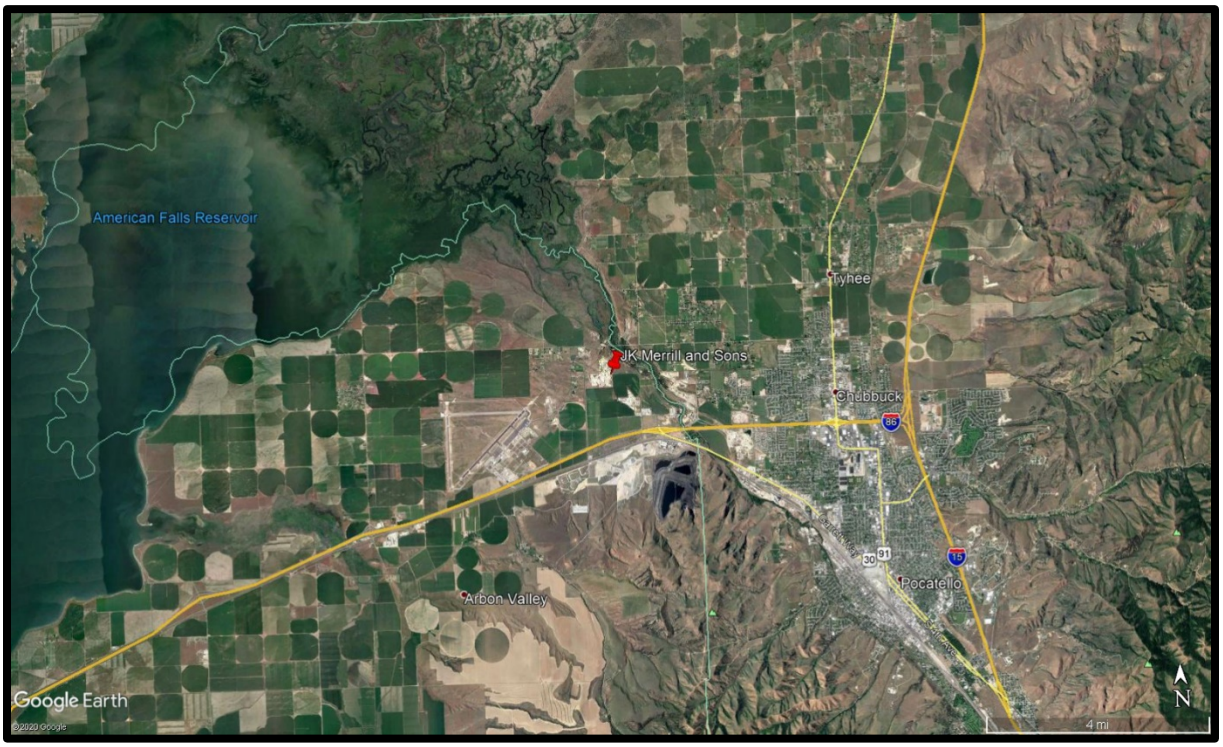

Figure 1. Facility Location

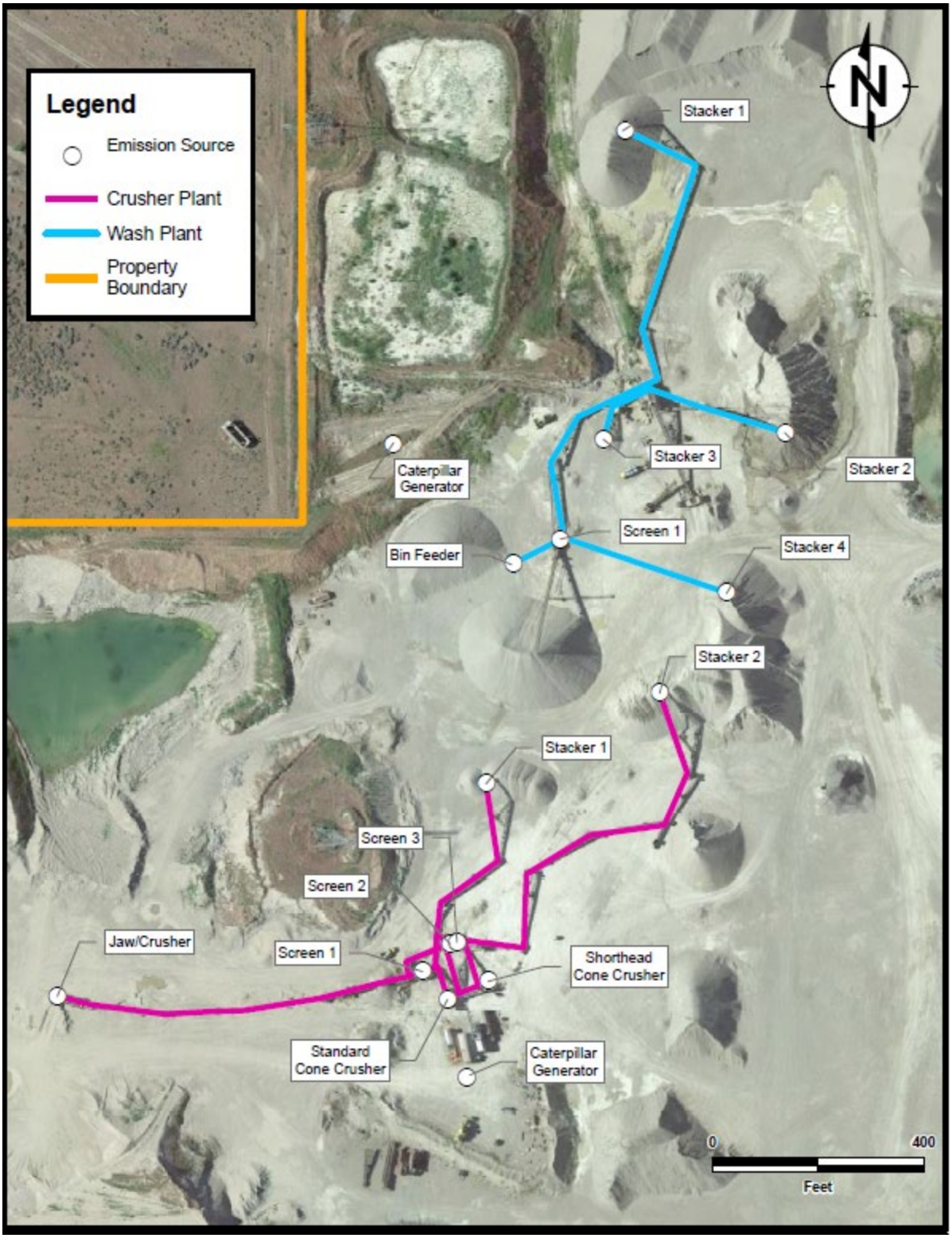

Figure 2. Facility Site Plan

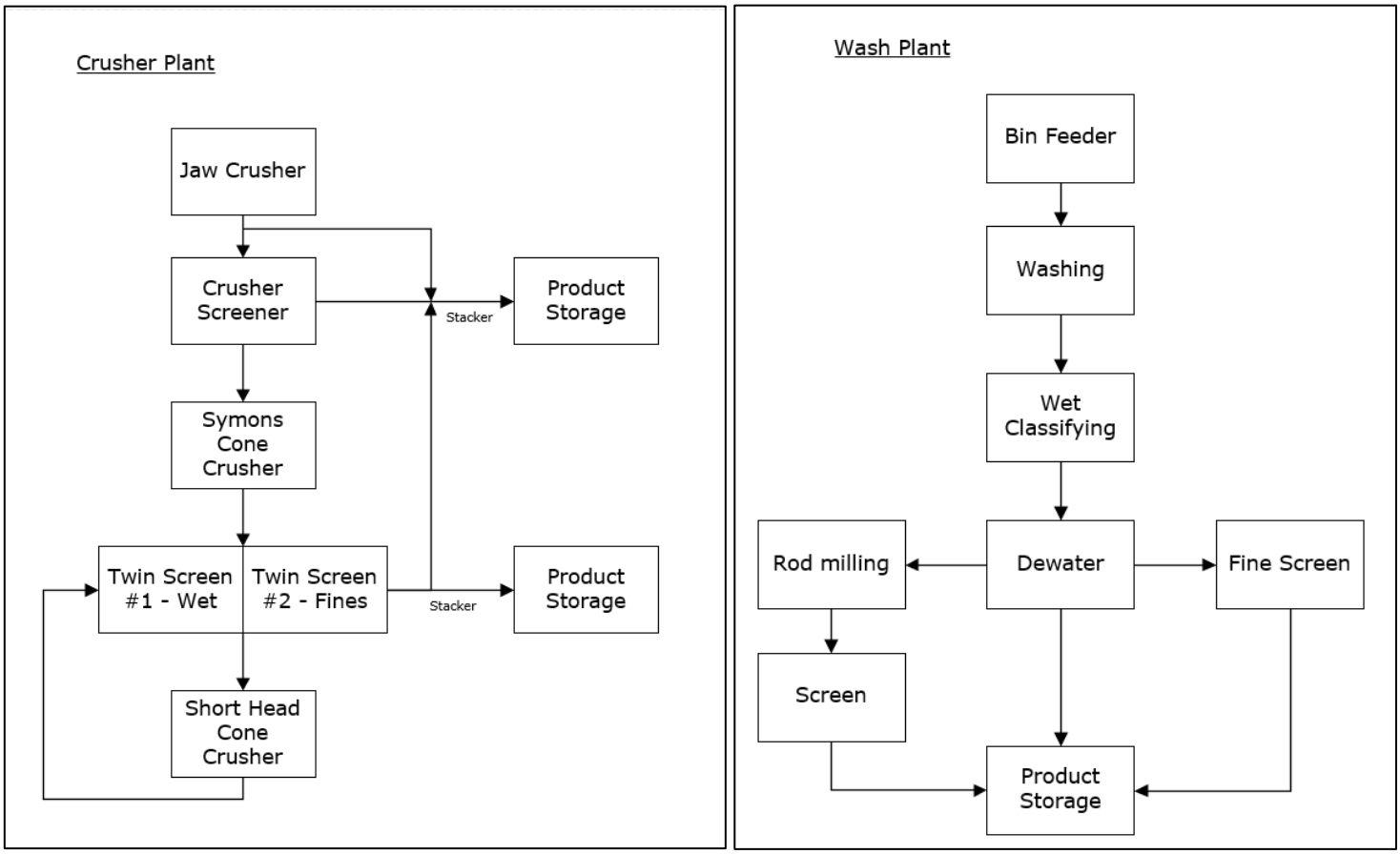

Figure 3. Process Flow Diagram

2.1 Emissions Description

Emissions from rock crushing include fugitive and non-fugitive particulate matter from the crusher, material screening and handling, and material stockpiles, and emissions from diesel combustion in the engine generator that provides electrical power to the crushing plant.

The Wash Plant contains wet processes with no fugitive dust emissions, therefore, emissions from the Wash Plant are limited to stack emissions from a diesel combustion in the engine generator that provides electrical power for Wash Plant's equipment.

Mobile equipment in use at the facility includes front loaders, backhoes, and a water truck. Emissions from mobile equipment include fugitive dust generated from travel on haul roads.

Sand and gravel at the Crusher Plant are mined by open pit excavation. Open pit excavation is carried out primarily using backhoes and front loaders. After mining, the materials are transported to the processing plant by belt conveyors. After being transported to the processing plant, the wet sand and gravel raw feed is stockpiled or emptied directly into a hopper, which typically is covered with a "grizzly" of parallel bars to screen out large cobbles and boulders. From the hopper, the material is transported to fixed or vibrating scalping screens by gravity, belt conveyors, hydraulic pump, or bucket elevators. The scalping screens separate the oversize material from the smaller, marketable sizes.

Oversize material may be used for erosion control, reclamation, or other uses, or it may be directed to a crusher for size reduction, to produce crushed aggregate, or to produced manufactured sands. Following crushing, the material is returned to the screening operation for sizing. The material that passes through the scalping screen is fed into a battery of sizing screens, which generally consists of either horizontal or sloped, and either single or multideck, vibrating screens. Rotating trommel screens with water sprays are also used to process and wash wet sand and gravel. Screening separates the sand and gravel into different size ranges and water is sprayed throughout the screening process. After screening, the sized gravel is transported to stockpiles, storage bins, or in some cases, to crushers. After processing, the sand is transported to storage bins or stockpiles by belt conveyors.

3. PROPOSED SYNTHETIC LIMIT DESCRIPTION

As presented in the Consent Order, the potential to emit NO_X emissions from the two generator engines is above the Title V major source thresholds (there are no other stationary sources of NO_X emissions at the facility). The facility operates seasonally and for limited daily hours; therefore, actual NO_X emissions from the generator engines are much less than the 100 tpy Title V major source threshold. In accordance with the Consent Order, JK Merrill and Sons is requesting a limit proposing to limit operation of the engines such that potential emissions of NO_X are below Title V major source levels.

The remainder of emissions from the facility are particulate matter emissions from crushing, screening, material transfer, and fugitive particulate matter emissions from storage piles, and roadways. Fugitive emissions are not included in facility-wide emissions compared to the Title V major source thresholds because the facility operations are not a listed category of stationary source.[1]

3.1 Proposed Facility-Wide NO_X Emission Limit

JK Merrill and Sons requests that EPA establish a facility-wide federally enforceable NO_X limit of 90 tpy. This limit provides adequate buffer to ensure that NOx emissions are less than the Title V major source threshold.

As discussed in the next section, actual emissions of NO_X at the facility are currently 10 percent of the requested limit because the engines are only used on a seasonal basis. JK Merrill and Sons is not proposing to install any NO_X pollution control equipment on the generator engines.[2]

3.2 NO_X Emissions Calculations

The only sources of NO_X emissions at the facility are the two diesel-fueled generator engines: one 1,675 hp diesel-fueled generator engine (Caterpillar model 3512, manufactured in 1996) at the Crusher Plant, and one 469 hp diesel-fueled generator engine at the Wash Plant (Caterpillar model 3406, manufactured 1996).

---

[1] See definition of Major Source in 40 CFR 71.2

[2] JK Merrill and Sons is in the process of installing emission control technology in order to comply with NESHAP Subpart ZZZZ, however, those technologies do not affect NO_X emissions.

Facility-wide emissions calculations for all criteria pollutants and greenhouse gasses are provided in **Table 1**, which demonstrates that a synthetic minor limit is only necessary for emissions of NO_X, detailed emission calculations are provided in Appendix B.

Table 1. Facility-Wide Criteria Pollutant Emissions

Pollutant	Current Facility-Wide Potential Emissions (tpy)						Total Emissions (tons/year)
	Crushing	Screening	Drop Points	Pile Erosion	Road Dust	Engines	
PM	2.72	2.84	52.55	fugitive	fugitive	9.6	68
PM_{10}	1.22	1.47	24.86	fugitive	fugitive	7.4	35
$PM_{2.5}$	0.22	0.20	3.76	fugitive	fugitive	7.3	11
SO_2						0.10	0
NO_x						227.8	228
CO						18.1	18
VOC						10.8	11
CO2e						10,718	10,718

Potential hourly emissions from the engines are based on the maximum heat input rate of each engine (based on maximum diesel fuel usage) and emission factors taken from Section 3.4 - Large Stationary Diesel All Stationary Dual-fuel Engines (>600 hp) and AP-42 Section 3.3 - Gasoline and Diesel Industrial Engines (<600 hp) of EPA's AP-42 emission factor document. **Table 2** presents the current potential, actual, and proposed allowable NOx emissions from the facility. Maximum potential annual emissions are based on maximum hourly emission rate and continuous operation for 8,760 hours per year (hr/yr). 2019 Actual emissions are based on the 2019 diesel fuel usage and the AP-42 emission factors. JK Merrill and Sons is requesting a facility-wide NOx limit of 90 tpy.

Table 2. Facility-Wide NO_X Emissions

Pollutant	NO_X Emission Factor [1]		NO_X Emissions		
	lb/MMBtu		tpy		
	Crusher Plant Engine	Wash Plant Engine	Crusher Plant Engine	Wash Plant Engine	Total
Current Potential [2]	3.2	4.41	164	63	228
2019 Actual [3]			6.4	2.6	9
Requested Limit [4]			--	--	90

[1] NO_X emission factors are from AP-42 Section 3.4 (Large Stationary Diesel Engines) and Section 3.3 (Diesel Industrial Engines) for the Crusher Plant Engine and Wash Plant Engine, respectively.
[2] Potential NO_X emissions are based on the maximum heat input rate for each engine (Crusher Plant Engine = 11.725 MMBtu/hr; and Wash Plant Engine = 3.283 MMBtu/hr) and continuous operation (8,760 hrs/yr).
[3] 2019 Actual annual emissions are based on the 2019 actual fuel usage in gallons and the AP-42 emission factors (assuming a heat capacity of 137,030 Btu/gal diesel).
[4] JK Merrill and Sons requests a facility-wide limit of 90 tons per year.

3.3 Proposed Compliance Methods for Synthetic Minor Limit

Both generator engines are subject to NESHAP Subpart ZZZZ requirements, including carbon monoxide emission control technology requirements, monitor equipment and control device performance, conduct periodic carbon monoxide performance testing, complete routine maintenance and upkeep, keep records on engine performance, and submit compliance reports regarding the engines.

In order to demonstrate compliance with the 90 tpy limit, JK Merrill and Sons proposes the following monitoring, recordkeeping, and reporting requirements.

<u>Monitoring</u>

JK Merrill and Sons will monitor fuel use by installing, operating, and maintaining non-resettable fuel meters on both engines.

<u>Recordkeeping</u>

JK Merrill and Sons will keep daily records of fuel usage (in gallons) for each engine. Daily flow total will be recorded electronically, and a monthly total will be calculated for engine. Monthly NO_X emissions for each engine will be calculated using monthly fuel usage, diesel fuel heat content (137,030 Btu/gallon), and the AP-42 emission factors presented in Table 1. Each month, the 12-month rolling NO_X emissions will be updated and compared with the 90 tpy facility-wide limit.

Reporting

JK Merrill and Sons will submit an annual compliance report with the most recent 12-month rolling total NO_X emissions.

Attachment 2

Updated Appendix B – Detailed Emission Calculations

Facility-Wide Emissions Inventory
J.K. Merrill Pit

Emission Inventory Summary

Pollutant	Current Facility-Wide Potential Emissions (tpy)						Total Emissions (tons/year)	Requested Limit (tons/year)
	Crushing	Screening	Drop Points	Pile Erosion	Road Dust	Engines		
PM	2.72	2.84	52.55	fugitive	fugitive	9.6	68	
PM_{10}	1.22	1.47	24.86	fugitive	fugitive	7.4	35	
$PM_{2.5}$	0.22	0.20	3.76	fugitive	fugitive	7.3	11	
SO_2						0.10	0	
NO_x						227.8	228	90
CO						18.1	18	
VOC						10.8	11	
CO2e						10,718	10,718	

Facility-Wide Emissions Inventory
J.K. Merrill and Sons

Rock Crushing Fugitive Emission Calculations

General Operational Parameters

Hours of Operation	8,760	hrs/yr
Potential Crusher Thoughput	200	tons/hr
	1,752,000	tons/yr
2019 Throughput	213,655	tons/yr
Control Efficiency	0	%

Emission Factor[1,2,3]

Emission Source	Emission Factor (lb/ton)		
	$PM_{2.5}$	PM_{10}	PM
Primary Crushing (Jaw) - Dry	4.7E-05	3.1E-04	7.0E-04
Secondary Crushing (All) - Wet	1.0E-04	5.4E-04	1.2E-03

Emission Calculations

Equipment Type	Potential Emissions						Actual Emissions		
	lb/hr			tpy			tpy		
	$PM_{2.5}$	PM_{10}	PM	$PM_{2.5}$	PM_{10}	PM	$PM_{2.5}$	PM_{10}	PM
Jaw Crusher - Primary Dry	0.01	0.06	0.14	4.1E-02	2.7E-01	6.1E-01	5.0E-03	3.3E-02	7.5E-02
Symons Cone - Secondary Wet	0.02	0.11	0.24	8.8E-02	4.7E-01	1.1E+00	1.1E-02	5.8E-02	1.3E-01
Short Head Cone - Secondary Wet	0.02	0.11	0.24	8.8E-02	4.7E-01	1.1E+00	1.1E-02	5.8E-02	1.3E-01
Total	0.049	0.28	0.62	0.22	1.2	2.7	0.026	0.15	0.33

Notes:

[1] PM emission factor for Primary Crushing (Jaw) are the AP-42 1995 emission factors for Primary Crusher. PM10 emission factor based on ratio of tertiary crushing PM10/PM. These emission factors should only be used for Jaw Crushers.

Dry = Uncontrolled emission rates

Wet = Controlled emission rates

[2] Secondary Crushing uses Tertiary Crushing emission factors per footnote (n) of AP-42 Ch. 11.19.2-2.

[3] Where $PM_{2.5}$ emission factors (EF) are not provided in AP-42 Ch. 11.19.2-2, a ratio of aerodynamic particle size multipliers from AP-42 Ch. 13.2.4 was used to estimate PM2.5 emission factors. PM2.5 EF = (PM10 EF/0.35)*0.053

Sample Calculations:

Emissions (tons/yr) = Crushing Emission Factor (lb/ton) * Throughput (tons/yr) * (1-Control Eff %) / 2,000 (lb/ton)

Emissions (tons/hr) = Crushing Emission Factor (lb/ton) * Throughput (tons/hr) * (1-Control Eff %) / 2,000 (lb/ton)

Facility-Wide Emissions Inventory
J.K. Merrill and Sons

Screening Fugitive Emission Calculations

General Operational Parameters

Hours of Operation	8,760	hrs/yr
Potential Crusher Thoughput	200	tons/hr
	1,752,000	tons/yr
Potential Wash Plant Thoughput	250	tons/hr
	2,190,000	tons/yr
Control Efficiency	0	%

Emission Factor[1,2]

Emission Source	Emission Factor (lb/ton)		
	$PM_{2.5}$	PM_{10}	PM
Screening (All) - Wet	2.5E-05	3.7E-04	1.1E-03
Fines Screening - Wet	1.7E-04	1.1E-03	1.8E-03

Emission Calculations

Equipment Type	Potential Throughput	2019 Throughput	Potential Emissions						Actual Emissions		
			lb/hr			tpy			tpy		
	tpy	tpy	$PM_{2.5}$	PM_{10}	PM	$PM_{2.5}$	PM_{10}	PM	$PM_{2.5}$	PM_{10}	PM
Crusher Screen - Wet	1,752,000	213,655	5.0E-03	7.4E-02	2.2E-01	2.2E-02	3.2E-01	9.6E-01	2.7E-03	4.0E-02	1.2E-01
Twin Screen #1 - Wet	1,254,432	152,977	3.3E-02	2.2E-01	3.6E-01	1.0E-01	6.9E-01	1.1E+00	1.3E-02	8.4E-02	1.4E-01
Twin Screen #2 - Wet Fines	827,925	100,965	3.3E-02	2.2E-01	3.6E-01	6.9E-02	4.6E-01	7.5E-01	8.4E-03	5.6E-02	9.1E-02
Total			0.07	0.51	0.9	0.20	1.5	2.8	0.024	0.18	0.35

Notes:

[1] PM and PM_{10} emission factors are taken from AP-42 Ch. 11.19.2-2.

Dry = Uncontrolled emission rates

Wet = Controlled emission rates

[2] Where $PM_{2.5}$ emission factors (EF) are not provided in AP-42 Ch. 11-.19.2-2, a ratio of aerodynamic particle size multipliers from AP-42 Ch. 13.2.4 was used to estimate PM2.5 emission factors. PM2.5 EF = (PM10 EF/0.35)*0.053

Sample Calculations:

Emissions (tons/yr) = Screening Emission Factor (lb/ton) * Throughput (ton/yr) * (1-Control Eff %) / 2,000 (lbs/ton)

Facility-Wide Emissions Inventory
J.K. Merrill and Sons

Drop Point Fugitive Emission Calculations

Drop Point Specifications

Drop No.	Description	Media Type	Control Method	No. of like transfer points
1	Crusher Plant - first drop from screen on to conveyors	Sand, Aggregate	None (low drop height)	5
2	Crusher Plant - conveyor transfer points	Sand, Aggregate	None (low drop height)	12
3	Crusher Plant - drop, conveyor to pile storage	Sand, Aggregate	None (low drop height)	3
4	Wash Plant - drop into bin	Sand, Aggregate	None (low drop height)	1
5	Wash Plant - first drop on to conveyor	Sand, Aggregate	None (low drop height)	1
6	Wash Plant - conveyor transfer points	Sand, Aggregate	None (low drop height)	1

Constants[1,2]

Wind Speed (mph)	9.6
Moisture content (%)	3.5

Emission Factor[3]

Pollutant	Emission Factor (lb/ton)
PM	0.0025
PM_{10}	0.0012
$PM_{2.5}$	0.0002

Emission Calculations

Drop No.	Potential Throughput	2019 Throughput	Uncontrolled Emission Rate (tpy)			Exemption Threshold (tpy)[4]	Over Threshold?
	tpy	tpy	$PM_{2.5}$	PM_{10}	PM		
1	1,752,000	213,655	0.79	5.23	11.1	2.0	Yes
2	1,752,000	213,655	1.90	12.6	26.6	2.0	Yes
3	1,752,000	213,655	0.475	3.14	6.64	2.0	Yes
4	2,190,000	106,608	0.198	1.308	2.77	2.0	No
5	2,190,000	106,608	0.198	1.308	2.77	2.0	No
6	2,190,000	106,608	0.198	1.308	2.77	2.0	No
Total			3.76	24.9	52.6		

Notes:

[1] Average wind speed in Pocatello from NOAA Local Climatological Data Summary.

[2] Moisture content taken from previous submittal.

[3] Emission factor calculated based on the methodology described in AP-42 Chapter 13.2.4

Aggregate Handling Emission Factor (lb/ton) = $k * 0.0032 * (U/5)^{1.3} / (M/2)^{1.4}$

where, k = particle size multiplier (dimensionless)

U = mean wind speed (mph)

M = material moisture conent (%)

[4] Emissions from drop points qualify for insignificant treatment if emissions are less than the insignificant emission level of 2 tpy.

Sample Calculations:

Emissions (lb/hr) = Aggregate Handling Emission Factor (lb/ton) * Throughput (ton/hr) * (1-Control Eff %)

Facility-Wide Emissions Inventory
J.K. Merrill and Sons

Potential Engine Emission Calculations (Before Synthetic Minor Limit)

Engine Specifications

Crusher Plant Engine		
Make and model	Caterpillar 3512	
Maximum rated engine power	1,675	bhp
	1,250	kW
2019 annual hours of operation	933	hours/year
Potential hours of operation	8,760	hours/year
Hourly fuel usage	86	gal/hr
2019 fuel usage	29,051	gal/year
Potential fuel usage	749,551	gal/year
Fuel Type	ULSD	

Wash Plant Engine		
Make and model	Caterpillar 3406	
Maximum rated engine power	469	bhp
	350	kW
Potential hours of operation	8,760	hours/year
Hourly fuel usage	24	gal/hr
Potential fuel usage	209,874	gal/year
Fuel Type	ULSD	

Emission Factors

Criteria Air Pollutant	Emission Factor (lb/MMBtu)	
	> 600 hp	< 600 hp
NO_x	3.2	4.41
CO	2.33E-01	4.25E-01
SO_2	1.52E-03	1.52E-03
PM	1.00E-01	3.10E-01
PM10	5.73E-02	3.10E-01
PM2.5	5.56E-02	3.10E-01
VOC	9.00E-02	4.30E-01
CO2	1.63E+02	1.63E+02
CH4	6.61E-03	6.61E-03
N2O	1.32E-03	1.32E-03
CO2e	1.64E+02	1.64E+02

Facility-Wide Emissions Inventory
J.K. Merrill and Sons

Potential Engine Emission Calculations (Before Synthetic Minor Limit)

Emission Calculations

Pollutant	Potential Emissions					
	lb/hr			Potential (tpy)		
	Crusher	Wash	Total	Crusher	Wash	Total
NO_x	38	14	52	164	63	228
CO	3	1.4	4.1	12	6	18
SO_2	1.8E-02	5.0E-03	2.3E-02	0	0	1.0E-01
PM	1.2	1.0	2.2	5	4	9.6
PM10	0.67	1.0	1.7	3	4	7.4
PM2.5	0.65	1.0	1.7	3	4	7.3
VOC	1.06	1.4	2.5	5	6	10.8
CO2e	1,918	537	2,455	8,374	2,345	10,718

Speciated Emissions[4]

Pollutant	CAS No.	Emission Factor (lb/MMBtu)	Potential Emissions						HAPS?
			lb/hr			tpy			
			GE-1	GE-2	Total	GE-1	GE-2	Total	
Benzene	71-43-2	7.76E-04	9.10E-03	2.55E-03	1.16E-02	3.99E-02	1.12E-02	5.10E-02	Yes
Toluene	108-88-3	2.81E-04	3.29E-03	9.23E-04	4.22E-03	1.44E-02	4.04E-03	1.85E-02	Yes
Xylenes	1330-20-7	1.93E-04	2.26E-03	6.34E-04	2.90E-03	9.91E-03	2.78E-03	1.27E-02	Yes
Formaldehyde	50-00-0	7.89E-05	9.25E-04	2.59E-04	1.18E-03	4.05E-03	1.13E-03	5.19E-03	Yes
Acrolein	107-02-8	7.88E-06	9.24E-05	2.59E-05	1.18E-04	4.05E-04	1.13E-04	5.18E-04	Yes
Napthalene	91-20-3	1.30E-04	1.52E-03	4.27E-04	1.95E-03	6.68E-03	1.87E-03	8.55E-03	Yes
Total HAPS			1.72E-02	4.82E-03	2.20E-02	7.53E-02	2.11E-02	9.64E-02	

Conversion factor

7,000 Btu per hp-hr
137,030 Btu per gal

Notes:

[1] Emission factors taken from AP-42 Chapter 3.4 - Large Stationary Diesel And All Stationary Dual-fuel Engines (>600 hp) and AP-42 Chapter 3.3 (Gasoline and Diesel Industrial Engines). CO emission factors based on oxidation system guarantee.

[2] Chapter 3.4 calculation methodology.

[3] For small diesel engines assume PM = PM_{10} = PM_{25}

[4] Speciated emissions based on emission factors for large uncontrolled stationartory diesel engines

[5] Greenhouse Gas emission factors from 40 CFR 98, Subpart C, Table C-1.

[6] CO2e calculated based on global warming potential (GWP) for each Greenhouse gas: CO2 = 1; CH4 = 25; and N2O = 298 (40 CFR Part 98, Subpart A).

Attachment 3

Generator Engine Source Test and Manufacturer Data

Table 2: Applicability and Limitations

J. K. Merrill & Sons		
Subpart ZZZZ **Requirement for Existing Stationary RICE Located at Area Sources of HAP Emissions**		
Engine Type	**Engine Power (hp)**	**Emission Standards ppmvd at 15% O_2**
		CO
Caterpillar 3406	489	49
Caterpillar 3512DI	1,341	23
Subpart OOO **Standards of Performance for Nonmetallic Mineral Processing Plants**		
Emissions Point	**Emission Standards Percent Opacity (%)**	
	Crushers	**Transfer Points**
Crusher plant	15	10
Wash plant	12	7

3.0 EMISSIONS TEST RESULTS

3.1 Test Results

Table 3 presents the results of the visible emissions test performed on July 17-19. A diagram of the plant layout is shown in Appendix B, which includes fugitive emission point numbering. Please note that the fugitive emission point numbers are arbitrary and have been assigned by Bison. Bison did not record any opacity readings above 0%.

Table 4 presents the July 18, 2018, Subpart ZZZZ test results for the generators.

Table 3: Visible Emissions Test Results

J. K Merrill & Sons Pocatello, ID Method 9 Visible Emissions Test Results July 17-19, 2018				
Source	**Pollutant**	**Emissions***	**Permit Limit**	**Status**
Wash Plant Transfer points	Visible Emissions	0%	7%	Pass
Crushing Plant Crushers	Visible Emissions	0%	15%	Pass
Crushing Plant Transfer points	Visible Emissions	0%	10%	Pass

*Visible emissions results are shown as the highest observed 6-minute average opacity/emission point.

Table 4: Caterpillar 3512DI Subpart ZZZZ Results

J. K. Merrill & Sons Pocatello, ID Caterpillar 3512DI July 18, 2018 Subpart ZZZZ Results						
		Run 1	**Run 2**	**Run 3**	**Avg.**	**Limitations**
Test Date	MM/DD	7/18	7/18	7/18		
Start Test	mst	7:31	8:31	9:31		
End Test	mst	8:30	9:30	10:30		
Kilowatts	kW	1003	1003	1003	**1003**	
Emissions						
Carbon Monoxide	ppm	376	415	412	**401**	NA
	ppm @ 15% O_2	219	247	242	**236**	23

Table 5: Caterpillar 3406 Subpart ZZZZ Results

J. K. Merrill & Sons Pocatello, ID Caterpillar 3406 July 18, 2018 Subpart ZZZZ Results						
		Run 1	**Run 2**	**Run 3**	**Avg.**	**Limitations**
Test Date	MM/DD	7/18	7/18	7/18		
Start Test	mst	13:17	14:17	15:17		
End Test	mst	14:16	15:16	16:16		
Kilowatts	kW	363	363	363	**363**	
Emissions						
Carbon Monoxide	ppm	397	401	396	**398**	NA
	ppm @ 15% O_2	213	216	205	**211**	49

3.2 Operating Conditions and Production Data

The crushing and screening plant operated without interruption during each test. Table 5 gives a summary of the plant operating conditions during testing. Plant operations data was collected and provided by JKM on the day of testing.

3.3 Field Notes

Testing chronological events, such as test times and durations, are presented in Appendices B and C of this report. Environmental conditions on the day of testing were clear and sunny with temperatures in the high 80s. Testing proceeded without interruption or deviation from the approved test protocol and no unusual or adverse conditions were noted that may have influenced the test results.

4.0 EMISSION TEST METHODS AND PROCEDURES

4.1 Sampling Location

Sampling was conducted using existing ports on the dust collector stack that were accessed by latter.

4.2 Deviations, Errors, and Omissions

Bison mistakenly recorded ETA as the Method 9 certification on opacity data sheet. Conor Fox is certified by Compliance Assurance on February 28, 2018. Testing proceeded as outlined in the project protocol without interruption or deviation.

4.3 Testing Methods and Procedures

Bison testing personnel performed the following EPA methods described in Title 40, Code of Federal Regulations (CFR), Part 60, Appendix A.

EPA Reference Method 3A, "*Determination of Oxygen and Carbon Dioxide Concentrations in Emissions from Stationary Sources (Instrumental Analyzer Procedure).*" The objective of Method 3A is to determine the molecular weight of the source stream by determining oxygen (O_2) and carbon dioxide (CO_2) concentrations in the stack gas stream. The principle is to extract a gas sample from a stationary source and route the sample through a conditioning system to a paramagnetic oxygen analyzer and an infrared carbon dioxide analyzer for the measurement of O_2 and CO_2 in percentages (%). The O_2 and CO_2 analyzers calibration adjustments are performed by sending EPA Protocol 1 gas directly to the analyzers. A system calibration is performed by sending calibration gas to the probe and through the system to the analyzers. The calibration error, system bias and system drift data, and measured concentrations are recorded on a data acquisition system (DAS).

EPA Reference Method 9, "*Visual Determination of the Opacity of Emissions from Stationary Sources.*" The objective of Method 9 is to quantify the visible opacity of a source plume. The principle of the method is for a "certified" observer to take quick observations of the plume at 15-second intervals, determine the reduction of light when looking through the plume and record a numerical value of the plume opacity. If the plume is white, the observer determines the reduction in background detail due to plume opacity assuming a detailed background is available. If it is not available any background will work. If the plume is black, the observer is to determine the reduction in light passing through the plume.

EPA Reference Method 10, "*Determination of Carbon Monoxide Emissions from Stationary Sources (Instrumental Analyzer Procedure).*" The objective of Method 10 is to determine the CO concentrations from the source. Method 10 entails extraction of a gas sample from a stationary source and routing the sample through a conditioning system to an analyzer for the measurement of CO in ppmvd. The CO analyzer calibration

adjustment is performed by sending EPA Protocol 1 gas directly to the analyzer. A system bias check is performed by sending calibration gas to the probe and through the system to the analyzer. The calibration error, system bias and system drift data, and measured concentrations are recorded on a data acquisition system (DAS) for permanent record.

1.0 INTRODUCTION

Bison Engineering, Inc. (Bison) has been retained by J. K. Merrill & Sons (JKM) to perform emission testing on two Caterpillar genset engines and visual emission observations on the crushing and wash facility at J. K. Merrill & Sons near Pocatello, Idaho. The project will be performed according to the details listed in this pretest protocol.

Facility Info:	J. K. Merrill & Sons, Inc.	
	Address:	1850 Tank Farm Road Pocatello, ID 83204
	Responsible Official:	Lloyd G. Merrill
	Phone:	208.237.6550
	Email:	wecrushrock@gmail.com
Federal Authority:	United States Environmental Protection Agency	
	Address:	1200 Sixth Avenue, Suite 900 Seattle, WA 98101
	Contact:	John Keenan
	Phone:	206.553.1817
	Email:	keenan.john@epa.gov

2.0 EMISSION SOURCE INFORMATION

2.1 Facility Description

J. K. Merrill & Sons operates two electrical diesel generators and a crushing and wash facility on the Shoshone-Bannock Indian Reservation in Pocatello, Idaho.

2.2 Process Information

This facility operates one 3512DI Caterpillar engine and one 3406 Caterpillar engine. The facility operates under 40 CFR part 60 subpart ZZZZ for the engines and 40 CFR part 60 subpart OOO for the crushing and washing facility.

2.3 Emission Source Description

The units to be tested are one 3512DI Caterpillar engine and one 3406 Caterpillar engine. The Cat 3512 has a rating of 1,341 bhp and 1,000 kW. The Cat 3406 has a brake horsepower rating of 489 bhp and 365 kW. Kilowatt ratings for the engines can be found in the appendix of the protocol.

The engines to be tested are subject to Subpart ZZZZ National Emission Standards for Hazardous Air Pollutants for Stationary Reciprocating Internal Combustion Engines, "Requirement for Existing Stationary RICE Located at Area Sources of HAP Emissions," and the crushing and wash facility is subject to Subpart OOO "Standards of Performance for Nonmetallic Mineral Processing Plants." Table 1 presents the criteria and guidelines for the facility.

Table 1: Applicability and Limitations

J. K. Merrill & Sons		
Subpart ZZZZ **Requirement for Existing Stationary RICE Located at Area Sources of HAP Emissions**		
Engine Type and Fuel	**Engine Power**	**Emission Standards ppmvd at 15% O_2**
		CO
Non-emergency, non-black start CI stationary RICE	300<HP≤500	49
Non-emergency, non-black start CI stationary RICE	HP>500	23
Subpart OOO **Standards of Performance for Nonmetallic Mineral Processing Plants**		
Emissions Point	**Emission Standards Percent Opacity (%)**	
	Crushers	**Transfer Points**
Crusher plant	15	10
Wash plant	12	7

2.4 Source Operating Conditions and Production Data

J. K. Merrill & Sons will operate the engines at a minimum of 90% of maximum capacity or at the engine's maximum achievable rate. The engines will operate at normal conditions during test. The facility will collect and log operations data and emission control system operating conditions during the testing period. Both engines achieve maximum load at 1800 RPMs. This will be used to calculate percent load.

Either J. K. Merrill & Sons personnel or Bison's representative will collect production data which includes:

1) Emission unit number,
2) Estimated percent load based on RPMs of engines,
3) Revolutions per minute (RPM) recorded once every 15 minutes,
4) Electricity production rate (kw/hour) recorded once every 15 minutes

2.5 Safety Considerations

Safety issues include an elevated working location, potential falling equipment, hot work surfaces and possible chemical exposure. Other safety points to emphasize are properly transporting the test equipment to and from the sample location, working with hot items, and working with a 110 VAC power supply.

PPE required for plant entry includes: steel-toed boots, hardhat, ANSI Z.87.1 certified safety glasses or googles, hearing protection, gloves, flame-resistant long-sleeved shirt and full-length pants.

3.0 SOURCE TEST PROGRAM DESCRIPTION

3.1 Testing Contractor

Bison Engineering Inc. (Bison) is a full-service air quality consulting company that provides ambient air and meteorological monitoring, air quality permitting, air quality modeling, regulatory negotiations, process-to-emissions optimization and source testing services.

Testing Contractor:		Bison Engineering, Inc.
	Address:	1400 11th Avenue, Ste. 200 Helena, MT 59601
	Project Manager:	Conor Fox, QSTI
	Phone:	406.442.5768
	Email:	cfox@bison-eng.com

3.2 Test Program Organization

The following chart shows the internal structure of Bison's Montana-based stack testing teams. This test will be performed from Bison's Helena office. Conor Fox, QSTI, will serve as project manager.

Bison Engineering Organizational Chart

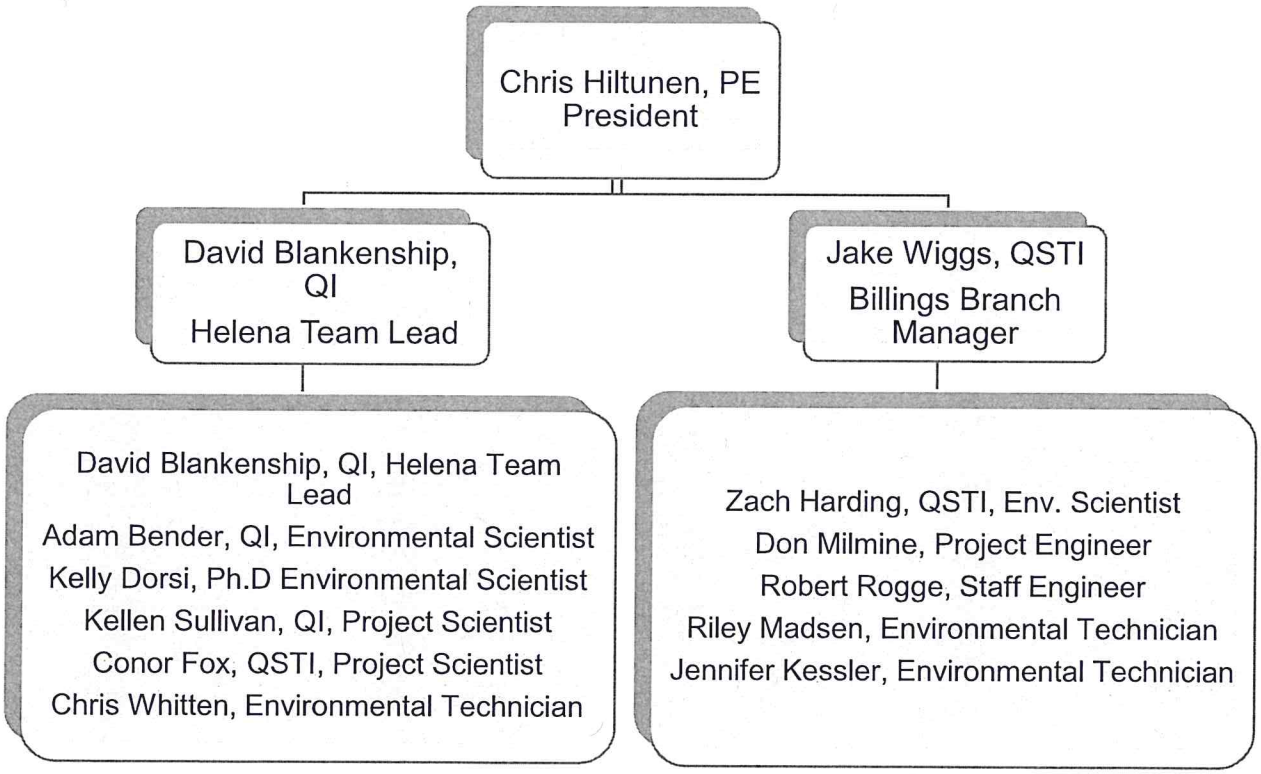

Bison Emission Testing Personnel

Personnel	Experience	Length of Experience
Chris Hiltunen, P.E.	Stack Testing and Ambient Monitoring	20+ Years
Dave Blankenship, QI	Stack Testing	20 Years
Jake Wiggs, QSTI	Stack Testing	10 years
Adam Bender,QI	Stack Testing	7 Years
Kellen Sullivan, QI	Stack Testing	5 Years
Kelly Dorsi, PhD	Stack Testing	3 Years
Brian Murphy	Stack Testing	3 Years
Mike Williams	Stack Testing	2 Years
Don Milmine	Stack Testing and Ambient Monitoring	20+ Years
Robert Rogge	Stack Testing	2 Years
Riley Madsen	Stack Testing	1 Year
Zach Harding, QSTI	Stack Testing	4 Years
Conor Fox, QSTI	Stack Testing	7 Years
Chris Whitten	Stack Testing	1 Year
Jennifer Kessler	Stack Testing	1 Year

3.3 Test Program Objectives

J. K. Merrill & Sons will have the Caterpillar RICE engines tested for O_2 (oxygen) and CO (carbon monoxide) concurrently and the crushing and wash facility tested for visible emissions. The testing will be conducted to demonstrate compliance with 40 CFR part 60 subparts ZZZZ and OOO.

3.4 Responsibilities of Project Participants

A quality project starts with the test plan, continues with ongoing quality assurance during the testing, and is completed with a final comprehensive report.

The owner and operator of the emission source being tested are responsible for the following:

- Accessibility of the testing location;
- Ensuring that the location is a safe working environment and meets all state and federal safety standards;
- Proper operating status of the source and emission control units being tested and data logs that document that status;
- Verification that the fuels, raw materials and products associated with the source are either typical or worst case; and

- Notification to the testing consultant and regulatory authority of any changes to the process, proposed test dates or safety conditions.

The testing consultant is responsible for the following:

- Production of a pretest protocol that has been reviewed and approved by the regulatory authority;
- Ensuring that each member of the testing consultant team is responsible for their own safety and the safety of the team.
- Ensuring that each member of the testing consultant team has the adequate safety and emission testing training to perform the project in a safe and proper manner;
- Performing the emission testing according to the applicable methods;
- Proper handling and shipping of any samples;
- Ensuring the testing equipment meets or exceeds the standards set forth by state and federal authorities; and
- Producing an emission testing project report and submitting it to the proper authority by the deadline stated in the pretest protocol.

The regulatory authority is responsible for the following:

- Proper review and written approval of the pretest protocol;
- Notifying the owner, operator and test consultant of any discrepancies in the pretest protocol in a timely manner;
- While onsite during the testing project, informing the owner, operator and testing consultant of any issues with the test or process;
- While on-site, properly reviewing and observing the test, process rates and emission control system operating status; and
- Performing a timely review of the emission test report and addressing any questions or concerns to the owner and operator with a copy of the questions to the testing consultant.

3.5 Test Date

Emission testing of J. K. Merrill & Sons engines is scheduled to take place on July 17 and 18, 2018. Bison will notify the USEPA if the testing dates change.

4.0 SOURCE TESTING PROCEDURES

4.1 Instrumentation and Equipment Description

Bison's instrumentation emission testing trailer is configured to meet the specifications in the methods. The figure below is an example flow diagram of the gaseous sampling system in Bison's emission sampling trailer.

Gaseous Sampling System

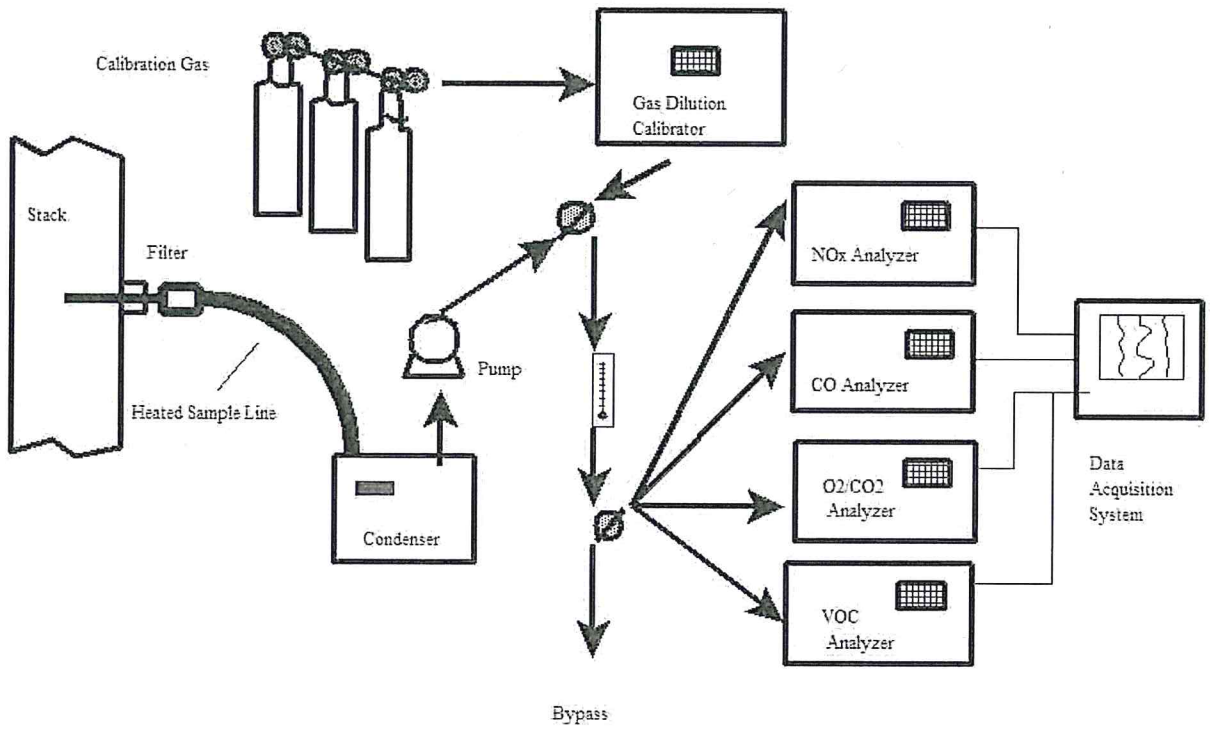

4.2 Test Methods

Carbon monoxide as determined by EPA Method 10 will be measured in units of concentration, ppm. Oxygen as determined by EPA Method 3A will be measured in units of percent, %.

Table 2 below shows the source to be tested, methods to be employed and duration of runs per test.

Table 2: Test Matrix

J. K. Merrill & Sons Proposed Testing Matrix				
Caterpillar RICE Engines Generators 1 and 2				
Unit	**Method**	**Description**	**Runs**	**Duration / Comments**
Gen 1 & 2	3A	Determination of O_2	3	60-minute test runs
	10	Determination of CO	3	60-minute test runs
Crushing and Wash Facility 40 CFR part 60 subpart OOO				
Unit	**Method**	**Description**	**Runs**	**Duration / Comments**
Crush and Wash Facility	9	Visual determination of opacity	1	30-minute test run/emission point

Testing will be performed using the following Environmental Protection Agency (EPA) Title 40, Code of Federal Regulations, Part 60 (40 CFR 60) testing and analytical methods, as approved and adopted by the appropriate regulatory agency.

4.2.1 Test Method Parameters

Parameters – CO Testing

- EPA-RM 3A *"Determination of Oxygen and Carbon Dioxide Concentrations in Emissions From Stationary Sources (Instrumental Analyzer Procedure)"*
- EPA-RM 10 *"Determination of Carbon Monoxide Emissions From Stationary Sources (Instrumental Analyzer Procedure)"*

4.2.2 Method Descriptions

EPA Reference Method 3A, "*Determination of Oxygen and Carbon Dioxide Concentrations in Emissions from Stationary Sources (Instrumental Analyzer Procedure).*" The objective of Method 3A is to determine the molecular weight of the source stream by determining oxygen (O_2) and carbon dioxide (CO_2) concentrations in the stack gas stream. The principle is to extract a gas sample from a stationary source and route the sample through a conditioning system to a paramagnetic oxygen analyzer and an infrared carbon dioxide analyzer for the measurement of O_2 and CO_2 in percentages (%). The O_2 and CO_2 analyzers calibration adjustments are performed by sending EPA Protocol 1 gas directly to the analyzers. A system calibration is performed

by sending calibration gas to the probe and through the system to the analyzers. The calibration error, system bias and system drift data, and measured concentrations are recorded on a data acquisition system (DAS) as part of the permanent test record.

EPA* Reference *Method 10, "Determination of Carbon Monoxide Emissions from Stationary Sources (Instrumental Analyzer Procedure)." The objective of Method 10 is to determine the CO concentrations from the source. Bison uses a Thermo Environmental Instruments 48i CO Analyzer. The calibration error, system bias and system drift data, and measured concentrations are recorded on a DAS.

EPA Reference Method 205, *"Verification of Gas Dilution Systems for Field Instrument Calibrations."* The objective of Method 205 is to produce a set of calibration gases that are used in instrumental analysis emission testing. This is achieved by diluting a concentrated gas to lower concentrations. The diluted gases are then to be used in calibrating analyzers, performing a system check and performing post-test bias checks. The dilution of the gases is performed by a dilution mass flow instrument. Method 205 stipulates the procedure and steps to evaluate the dilution instrument and confirm it is suitable for field use. Once the system has met the criteria cited, the dilution instrument is certified to be used in the field.

EPA Method 9, "*Visual Determination of the Opacity of Emissions from Stationary Sources."* The objective of Method 9 is to quantify the visible opacity of a source plume. The principle of the method is for a "certified" observer to take quick observations of the plume at 15-second intervals, determine the reduction of light when looking through the plume and record a numerical value of the plume opacity. If the plume is white, the observer determines the reduction in background detail due to plume opacity assuming a detailed background is available. If it is not available any background will work. If the plume is black, the observer is to determine the reduction in light passing through the plume.

Opacity observations are performed by a certified observer and are performed during the day of testing unless weather conditions do not allow proper reading. Should weather interfere with observations, Bison will work the source and proper authority to perform observations at a later date under equal process operating conditions.

Included in Appendix B of the protocol are the schematics for the crushing and wash facility. These will be used to determine the visible emissions observation points.

4.4 Sampling Site Location

Gaseous sampling will be conducted using existing ports located at the engines exhaust stack platform.

4.5 Sample Matrix

Parameters such as a stratification check and potentially hazardous gases such as CO will affect both the safety and sampling strategies of the source test. Methods 3A, 9, and 10 have been selected to perform the proposed test. These methods have been deemed appropriate and safe to achieve the objective of the test.

5.0 QUALITY ASSURANCE AND QUALITY CONTROL PROCEDURES

5.1 Sampling Protocol and Collection Procedures

All testing will be performed in accordance with the approved test methods and their prescribed quality control procedures.

Test data is recorded either on the DAS system or through direct entry into computer spreadsheets. Hand written datasheets will be used exclusively upon request.

5.2 Equipment and Instrument Calibration, Audits and Maintenance

Ongoing calibrations and audits of the testing equipment comprise a preventive maintenance program. Bison personnel calibrate equipment and instruments according to a set schedule and with standards traceable to the National Institute of Standards and Technology (NIST) and ASTM D7036. All equipment requiring calibrations for the methods described in this protocol also meet the appropriate criteria as specified in EPA 40 CFR Part 60 Appendix A. Equipment and instrument certifications and calibration results will be included in an appendix to the final test report.

The following table shows Bison's general calibration and audit procedure schedule for equipment that will be used on this test. Further calibration records can be provided upon request. Bison's equipment meets applicable EPA method calibration parameters. The final test report will include all applicable calibration data as an appendix.

Table 3: Equipment and Instrumentation Calibration and Audit Procedure

Equipment Calibration and Audit Procedures		
Unit	**Schedule and Requirement**	**Reference**
Temperature Gauges	Audited using traceable thermometers	Method 2, 10.3.1
Barometer	Calibrated against Mercury barometer prior to test	Method 2, 10.4
Gaseous Sampling Equipment Calibration and Audit Procedures		
Analyzers	Analyzer calibration error	Method 7E, 13.1
Sample System	Sample system bias check	Method 7E, 13.2
	Zero and calibration drift tests	Method 7E, 13.3
Dilution System	Check of system prior to each source test	Method 205

5.3 Data Collection, Reduction and Validation

5.3.1 Data validation and editing procedures

Emissions test data is subject to multiple levels of validation. Bison has self-auditing spreadsheets that alert the field technician when data may be entered incorrectly by flagging calculation results that are outside of expected or reasonable values. Data is also subject to audit during data processing and report generation. QA/QC checks associated with the testing (such as on-site analyzer calibrations and pre- or post-test equipment certifications) are rechecked during data processing.

A final draft of the test report is reviewed for technical content first by the Project Manager, and then by one of Bison's quality team managers. All raw data and spreadsheets will be supplied in an appendix to the final report.

5.3.2 Type of personnel performing data validation

Personnel performing testing, data validation and audits are trained in the applicable test methodology and authorized to review test data.

5.3.3 Sources of validation information used by data editors

The data editor follows current emission test methods that are found on the EPA website.

5.3.4 Specific validation procedures for each source test method

The specific validation procedures are cited in each method. Please refer to the methods for further details.

5.4 Internal Audits and Corrective Action

Stack flow measuring equipment is audited in accordance with the corresponding test methods.

When departures from policies or procedures in Bison's quality system or technical operations have been identified, a member of Bison's quality management team meets with the Bison personnel involved to evaluate the significance of the non-conforming work and discuss appropriate corrective action. Corrective actions are given the highest priority and determined immediately after identifying non-conforming work. The format for implementing corrective action follows ASTM D7036.

5.5 Documentation, Tracking and Certifications

Bison uses a unique project number for document control and tracking of all projects. All documentation pertaining to that project is filed according to project number.

The tracking number for this project is **JKM218688.**

Electronic project records are maintained on Bison's server indefinitely. The test project manager and a quality management team member will sign a certification page to document and authenticate that testing was performed according to the appropriate methods, meets applicable regulatory requirements and was performed in accordance with Bison's quality system. This certification page will accompany the final report.

Should a situation arise that warrants a deviation from the approved test protocol, it will be discussed with the client and/or regulatory agency. If necessary, approval to modify the test plan will be obtained from the regulatory agency prior to testing. Any modification to the test plan or deviation from approved test methods will be documented in the final test report.

.

6.0 SOURCE TEST REPORT

6.1 Report Format

The final test report will conform to standards in set forth by the USEPA, Bison's quality system and ASTM D7036-04. An example report format used by Bison is shown in Appendix A.

The test report will be submitted to USEPA within the 60-day required period unless prior authorization to extend the date due is obtained.

6.2 Data Reduction Procedures/Methods

Data processing is performed according to the methods. Field data is recorded either on DAS system or through direct entry into computer spreadsheets. Should hand datasheets be produced, the data is then entered into spreadsheets and reviewed by an independent team member.

All calculations are referenced to the relevant test methods. Bison does not deviate from the published methods. Example calculations will be included in the final report.

Application & Performance Warranty Data

Project Information

Site Location:	ID
Project Name:	3406B NESHAP
Application:	Prime Power
Number Of Engines:	1
Operating Hours per Year:	4000

Engine Specifications

Engine Manufacturer:	Caterpillar
Model Number:	3406B
Rated Speed:	1800 RPM
Type of Fuel:	Ultra-Low Sulfur Diesel (ULSD)
Type of Lube Oil:	1 wt% sulfated ash or less
Lube Oil Consumption:	0.1 % Fuel Consumption
Number of Exhaust Manifolds:	1

Engine Cycle Data

Load	Speed	Power	Exhaust Flow	Exhaust Temp.	Fuel Cons.	CO	NMHC	O_2	H_2O
%		bhp	acfm (cfm)	F	gal/hr	lb/hr	g/bhp-hr	%	%
100	Rated	519	2,691	1,025	84.9	5.16	0.19	10	12

Emission Data (100% Load)

Emission	Raw Engine Emissions						Target Outlet Emissions						Calculated Reduction
	g/bhp-hr	g/kW-hr	tons/yr	ppmvd @ 15% O_2	ppmvd	lb/hr	g/bhp-hr	g/kW-hr	tons/yr	ppmvd @ 15% O_2	ppmvd	lb/hr	
CO	4.51	6.048	10.32	760	1,405	5.16	1.35	1.814	3.1	228	421	1.55	70%

System Specifications

Oxidation System Specifications (IQ2-14-08, MIRA-MONITOR 2.2-OM)

Design Exhaust Flow Rate:	2,691 acfm (cfm)
Design Exhaust Temperature[1]:	1,025°F
Housing Model Number:	IQ2-14-08-HSG-0
Element Model Number:	MECB-OX-RB1513-1314-0000-291
Number of Catalyst Layers:	1
Number of Spare Catalyst Layers:	1
System Pressure Loss:	5.0 inches of WC (Clean) (12.5 mBar)
Exhaust Temperature Limits*:	450 – 1250°F (catalyst inlet); 1350°F (catalyst outlet) 288 – 677°C (catalyst inlet); 732°C (catalyst outlet)

* General catalyst temperature operating range. Performance is based on the Design Exhaust Temperature.

MIRATECH Scope of Supply & Equipment Details

	Model Number	Quantity
Oxidation Housing & Catalyst	**IQ2-14-08**	**1 / engine**
Catalyst Housing	IQ2-14-08-HSG-0	1 / engine
• Material	Carbon Steel	
• Paint	Standard High Temperature Black Paint	
• Approximate Diameter	12 inches	
• Inlet Pipe Size & Connection	8 inch FF Flange, 150# ANSI standard bolt pattern	
• Outlet Pipe Size & Connection	8 inch FF Flange, 150# ANSI standard bolt pattern	
• Overall Length	32 inches	
• Weight Without Catalyst	95 lbs	
• Instrumentation Ports	2 inlet/2 outlet (1/2" NPT)	
• Oxygen Sensor Ports	1 inlet/1 outlet (18mm)	
Oxidation Catalyst	MECB-OX-RB1513-1314-0000-291	1 / engine
Nut, Bolt, and Gasket Set	NBG-IQ14-1	1 / engine
Monitoring Equipment	**MIRA-MONITOR 2.2-OM**	**1 / engine**
Data Logger	MIRA-MONITOR 2.2-OM	1 / engine
• Dimensions	18.5" H x 16" W x 9" D	
• Weight	38 lbs	
• Enclosure	NEMA 4 (Indoor/Outdoor Rated)	

Customer Scope Of Supply

- Support Structure
- Attachment to Support Structure (Bolts, Nuts, Levels, etc.)
- Expansion Joints
- Exhaust Piping
- Inlet Pipe Bolts, Nuts, & Gasket
- Outlet Pipe Bolts, Nuts, & Gasket

Special Notes & Conditions

1. For housings and exhaust components that are insulated, internally or externally, please refer to Section 7.1 of the General Terms and Conditions of Sale to prevent voiding MIRATECH product warranty.
   - Carbon steel is suitable for temperatures up to 900° F / 482° C continuously, when covered with external insulation or a heat shield. For continuous operation above 900° F / 482° C, where the equipment is externally insulated or has a heat shield, stainless steel should be used.

- A packed silencer installed upstream of the MIRATECH catalyst system will void MIRATECH's limited warranty.
- Final catalyst housings are dependent on engine output and required emission reductions. Changes may be made to optimize the system design at the time of order.
- Any drawings included with this proposal are preliminary in nature and could change depending on final product selection.
- Any sound attenuation listed in this proposal is based on housing with catalyst elements installed.
- Any emission reductions listed in this proposal are based on housing with catalyst elements installed.
- MIRATECH will confirm shipping location upon placement of order.

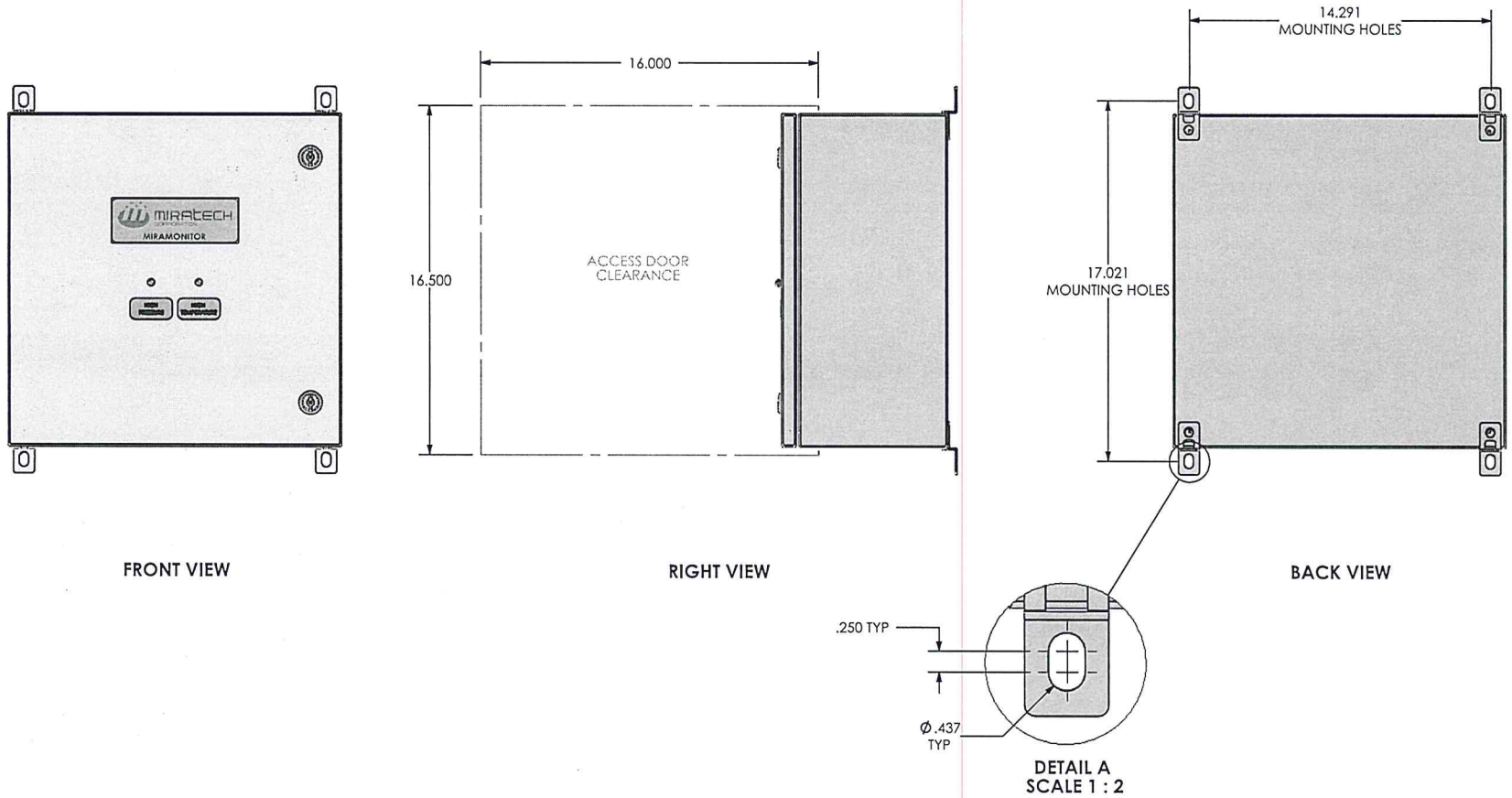

FRONT VIEW

RIGHT VIEW

BACK VIEW

DETAIL A
SCALE 1 : 2

NOTES:

1. ENCLOSURE SUITABLE FOR INDOOR/OUTDOOR INSTALLATION. NEMA 4RATED.
2. 32° - 122°F TEMPERATURE LIMIT.
3. POWER CONSUMPTION 0.3A, 120VAC.

PROJECT NAME	
PROPOSAL NUMBER	
SALES ORDER NO.	
CUSTOMER P.O.	

PROPRIETARY AND CONFIDENTIAL

THE INFORMATION CONTAINED IN THIS DRAWING IS THE SOLE PROPERTY OF MIRATECH CORPORATION. ANY REPRODUCTION IN PART OR AS A WHOLE WITHOUT THE WRITTEN PERMISSION OF MIRATECH CORPORATION IS PROHIBITED.

DIMENSIONS ARE APPROXIMATE IN INCHES UNLESS OTHERWISE SPECIFIED

DO NOT SCALE DRAWING

DRAWN	JFS	DATE	06/19/2013	DRAWING	MIRA-MONITOR 2.2-OM SD		REV 0
REVIEWED BY	CDT	DATE	06/19/2013	SIZE A	SCALE 1:8	WEIGHT: 38 lb	SHEET 1 OF 2

MIRATECH

MIRA-MONITOR 2.2-OM
Sales Drawing

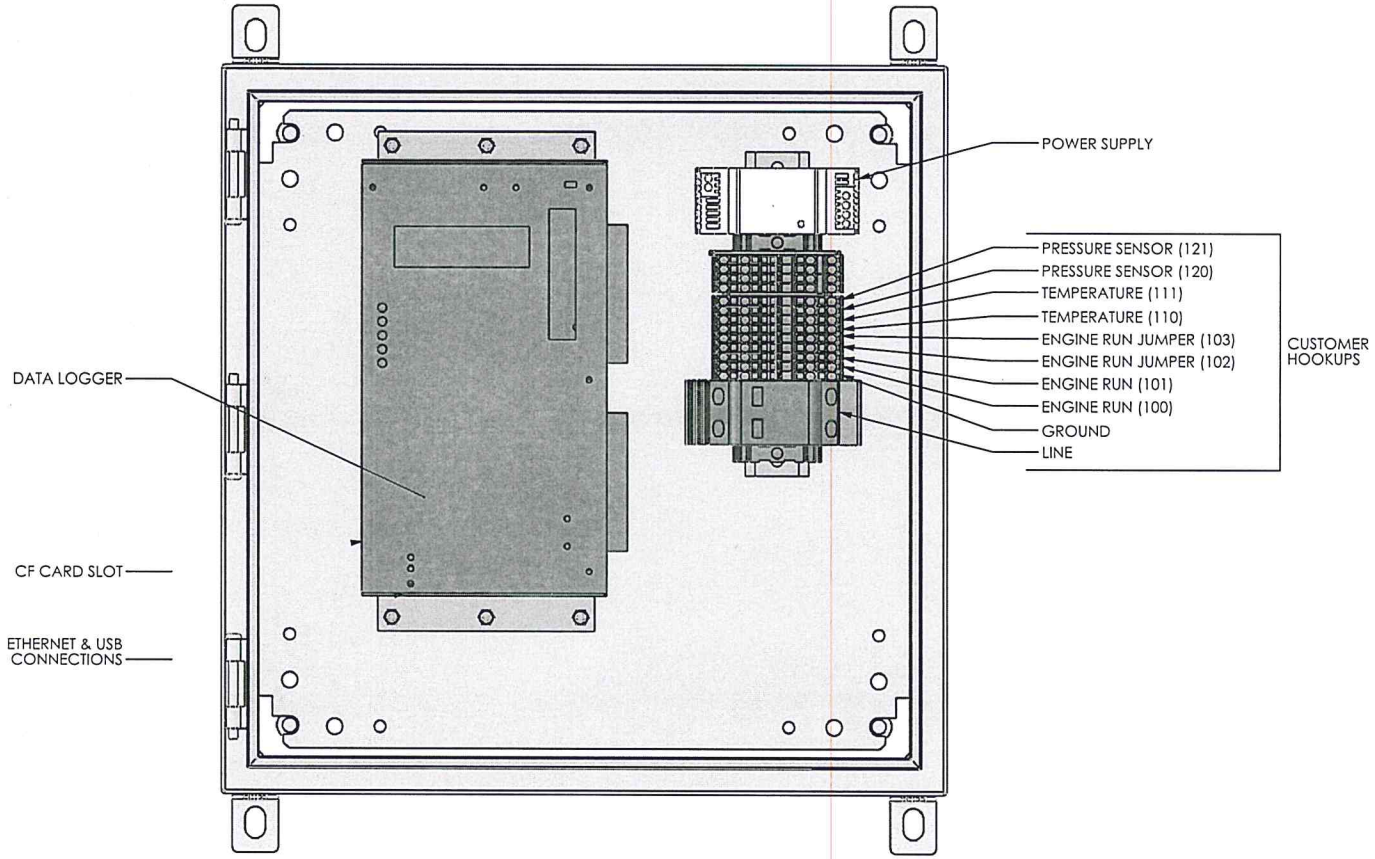

FRONT VIEW
(LID OPENED)

NOTES:

1. ENCLOSURE SUITABLE FOR INDOOR/OUTDOOR INSTALLATION. NEMA 4RATED.
2. 32° - 122°F TEMPERATURE LIMIT.
3. POWER CONSUMPTION 0.3A, 120VAC.

PROJECT NAME	
PROPOSAL NUMBER	
SALES ORDER NO.	
CUSTOMER P.O.	

PROPRIETARY AND CONFIDENTIAL

THE INFORMATION CONTAINED IN THIS DRAWING IS THE SOLE PROPERTY OF MIRATECH CORPORATION. ANY REPRODUCTION IN PART OR AS A WHOLE WITHOUT THE WRITTEN PERMISSION OF MIRATECH CORPORATION IS PROHIBITED.

DIMENSIONS ARE APPROXIMATE IN INCHES UNLESS OTHERWISE SPECIFIED

DO NOT SCALE DRAWING

DRAWN	JFS	DATE	06/19/2013
REVIEWED BY	CDT	DATE	06/19/2013

MIRATECH

MIRA-MONITOR 2.2-OM
Sales Drawing

DRAWING	MIRA-MONITOR 2.2-OM SD		REV 0
SIZE A	SCALE 1:4	WEIGHT: 38 lb	SHEET 2 OF 2

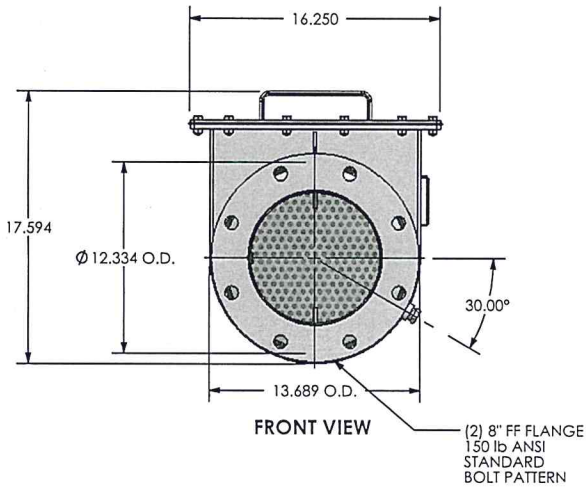

FRONT VIEW

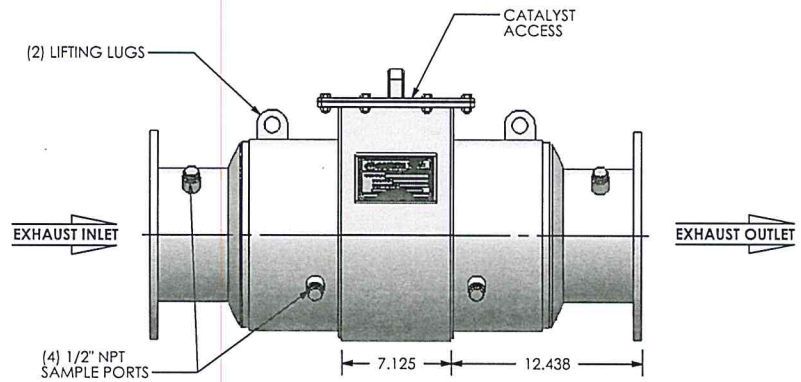

RIGHT VIEW

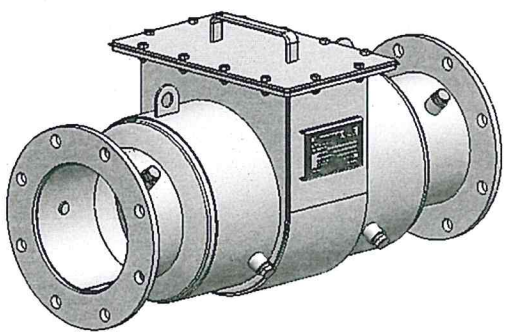

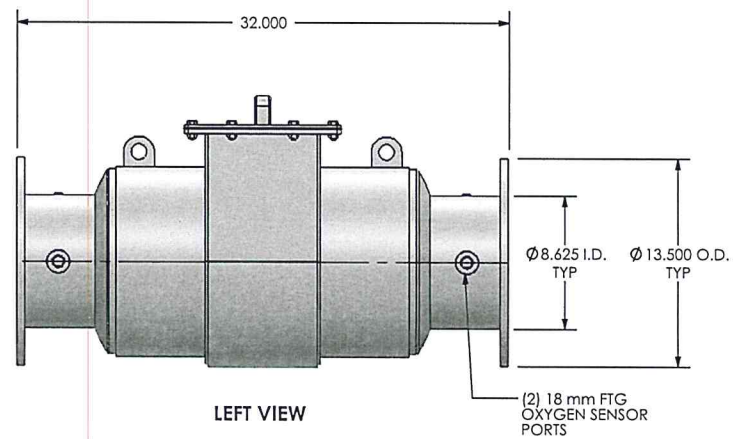

LEFT VIEW

MATERIAL CONSTRUCTION:

-CARBON STEEL

PROJECT NAME	**PROPRIETARY AND CONFIDENTIAL**	DIMENSIONS ARE APPROXIMATE IN INCHES UNLESS OTHERWISE SPECIFIED	MIRATECH
PROPOSAL NUMBER	THE INFORMATION CONTAINED IN THIS DRAWING IS THE SOLE PROPERTY OF MIRATECH CORPORATION. ANY REPRODUCTION IN PART OR AS A WHOLE WITHOUT THE WRITTEN PERMISSION OF MIRATECH CORPORATION IS PROHIBITED.	DO NOT SCALE DRAWING	**IQ2-14-08 Sales Drawing**
SALES ORDER NO.		DRAWN: CDT — DATE: 12/15/2011	DRAWING: IQ2-14-08 SD — REV: 0
CUSTOMER P.O.		REVIEWED BY: AJM — DATE: 12/16/2011	SIZE: A — SCALE 1:16 — WEIGHT: 123 lb FULLY LOADED — SHEET 1 OF 1

Application & Performance Warranty Data

Project Information

Site Location:	ID
Project Name:	3512 NESHAP
Application:	Prime Power
Number Of Engines:	1
Operating Hours per Year:	6000

Engine Specifications

Engine Manufacturer:	Caterpillar
Model Number:	3512 DI TA
Rated Speed:	1800 RPM
Type of Fuel:	Ultra-Low Sulfur Diesel (ULSD)
Type of Lube Oil:	1 wt% sulfated ash or less
Lube Oil Consumption:	0.1 % Fuel Consumption
Number of Exhaust Manifolds:	1

Engine Cycle Data

Load	Speed	Power	Exhaust Flow	Exhaust Temp.	Fuel Cons.	CO	NMHC	O_2	H_2O
%		*bhp*	*acfm (cfm)*	*F*	*gal/hr*	*g/bhp-hr*	*g/bhp-hr*	*%*	*%*
100	Rated	1,653	10,005	946	84.9	2.46	0.19	12.8	10

Emission Data (100% Load)

Emission	Raw Engine Emissions						Target Outlet Emissions						Calculated Reduction
	g/bhp-hr	*g/kW-hr*	*tons/yr*	*ppmvd @ 15% O_2*	*ppmvd*	*lb/MW-hr*	*g/bhp-hr*	*g/kW-hr*	*tons/yr*	*ppmvd @ 15% O_2*	*ppmvd*	*lb/MW-hr*	
CO	2.46	3.299	26.89	443	608	7.27	0.74	0.99	8.07	133	182	2.18	70%

System Specifications

Oxidation System Specifications (IQ2-26-14, MIRA-MONITOR 2.2-OM)

Design Exhaust Flow Rate:	10,005 acfm (cfm)
Design Exhaust Temperature[1]:	946°F
Housing Model Number:	IQ2-26-14-HSG-0
Element Model Number:	MECB-OX-RB2694-2475-0000-291
Number of Catalyst Layers:	1
Number of Spare Catalyst Layers:	1
System Pressure Loss:	6.0 inches of WC (Clean) (14.9 mBar)
Exhaust Temperature Limits*:	450 – 1250°F (catalyst inlet); 1350°F (catalyst outlet) 288 – 677°C (catalyst inlet); 732°C (catalyst outlet)

* General catalyst temperature operating range. Performance is based on the Design Exhaust Temperature.

MIRATECH Scope of Supply & Equipment Details

	Model Number	Quantity
Oxidation Housing & Catalyst	**IQ2-26-14**	**1 / engine**
Catalyst Housing	IQ2-26-14-HSG-0	1 / engine
• Material	Carbon Steel	
• Paint	Standard High Temperature Black Paint	
• Approximate Diameter	24 inches	
• Inlet Pipe Size & Connection	14 inch FF Flange, 150# ANSI standard bolt pattern	
• Outlet Pipe Size & Connection	14 inch FF Flange, 150# ANSI standard bolt pattern	
• Overall Length	43 inches	
• Weight Without Catalyst	259 lbs	
• Instrumentation Ports	2 inlet/2 outlet (1/2" NPT)	
• Oxygen Sensor Ports	1 inlet/1 outlet (18mm)	
Oxidation Catalyst	MECB-OX-RB2694-2475-0000-291	1 / engine
Nut, Bolt, and Gasket Set	NBG-IQ26-1	1 / engine
Monitoring Equipment	**MIRA-MONITOR 2.2-OM**	**1 / engine**
Data Logger	MIRA-MONITOR 2.2-OM	1 / engine
• Dimensions	18.5" H x 16" W x 9" D	
• Weight	38 lbs	
• Enclosure	NEMA 4 (Indoor/Outdoor Rated)	

Customer Scope Of Supply

- Support Structure
- Attachment to Support Structure (Bolts, Nuts, Levels, etc.)
- Expansion Joints
- Exhaust Piping
- Inlet Pipe Bolts, Nuts, & Gasket
- Outlet Pipe Bolts, Nuts, & Gasket

Special Notes & Conditions

1. For housings and exhaust components that are insulated, internally or externally, please refer to Section 7.1 of the General Terms and Conditions of Sale to prevent voiding MIRATECH product warranty.
   - Carbon steel is suitable for temperatures up to 900° F / 482° C continuously, when covered with external insulation or a heat shield. For continuous operation above 900° F / 482° C, where the equipment is externally insulated or has a heat shield, stainless steel should be used.

- A packed silencer installed upstream of the MIRATECH catalyst system will void MIRATECH's limited warranty.
- Final catalyst housings are dependent on engine output and required emission reductions. Changes may be made to optimize the system design at the time of order.
- Any drawings included with this proposal are preliminary in nature and could change depending on final product selection.
- Any sound attenuation listed in this proposal is based on housing with catalyst elements installed.
- Any emission reductions listed in this proposal are based on housing with catalyst elements installed.
- MIRATECH will confirm shipping location upon placement of order.

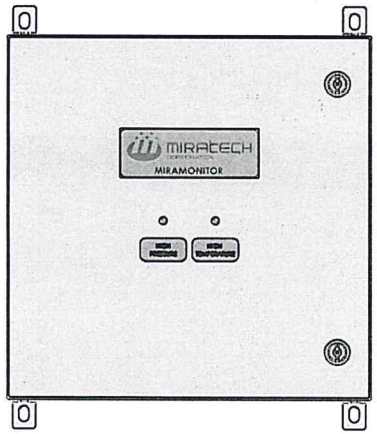

FRONT VIEW

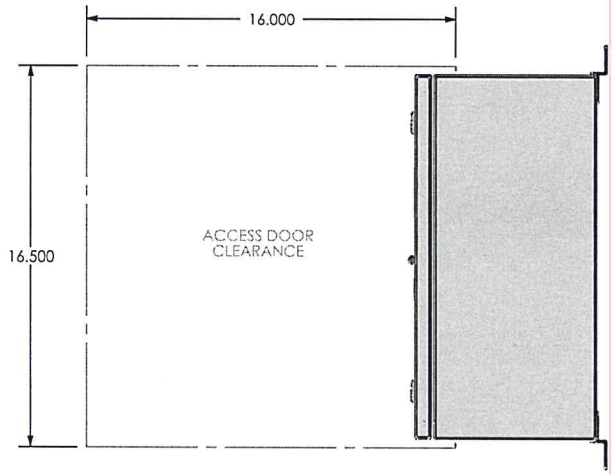

RIGHT VIEW

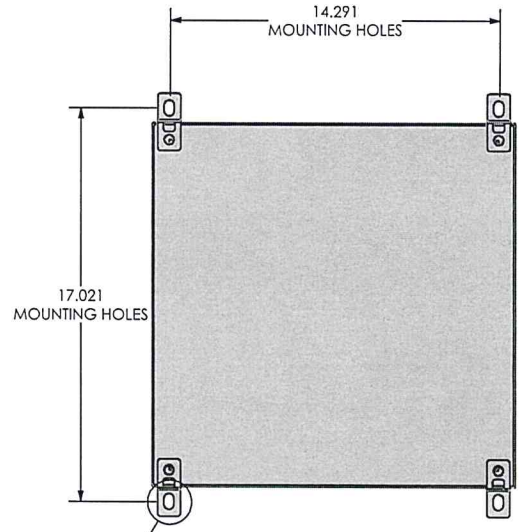

BACK VIEW

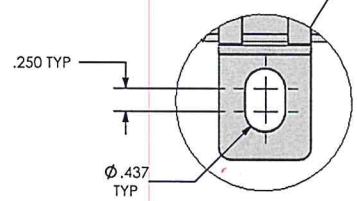

DETAIL A
SCALE 1 : 2

NOTES:

1. ENCLOSURE SUITABLE FOR INDOOR/OUTDOOR INSTALLATION. NEMA 4RATED.
2. 32° - 122°F TEMPERATURE LIMIT.
3. POWER CONSUMPTION 0.3A, 120VAC.

PROJECT NAME	**PROPRIETARY AND CONFIDENTIAL** THE INFORMATION CONTAINED IN THIS DRAWING IS THE SOLE PROPERTY OF MIRATECH CORPORATION. ANY REPRODUCTION IN PART OR AS A WHOLE WITHOUT THE WRITTEN PERMISSION OF MIRATECH CORPORATION IS PROHIBITED.	DIMENSIONS ARE APPROXIMATE IN INCHES UNLESS OTHERWISE SPECIFIED	MIRATECH				
PROPOSAL NUMBER		DO NOT SCALE DRAWING	**MIRA-MONITOR 2.2-OM Sales Drawing**				
SALES ORDER NO.		DRAWN JFS	DATE 06/19/2013	DRAWING MIRA-MONITOR 2.2-OM SD			REV 0
CUSTOMER P.O.		REVIEWED BY CDT	DATE 06/19/2013	SIZE A	SCALE 1:8	WEIGHT: 38 lb	SHEET 1 OF 2

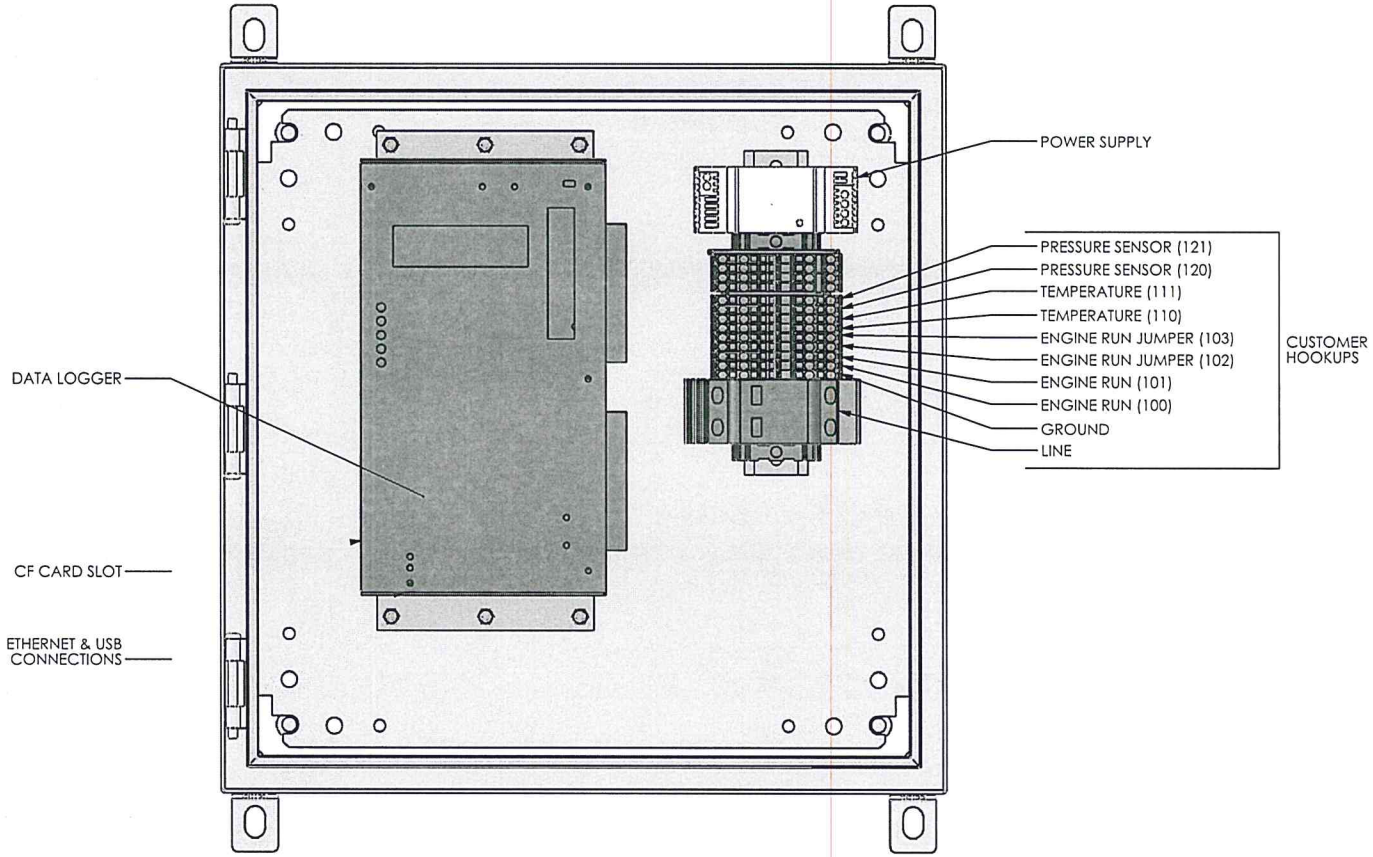

FRONT VIEW
(LID OPENED)

NOTES:

1. ENCLOSURE SUITABLE FOR INDOOR/OUTDOOR INSTALLATION. NEMA 4RATED.
2. 32° - 122°F TEMPERATURE LIMIT.
3. POWER CONSUMPTION 0.3A, 120VAC.

PROJECT NAME	**PROPRIETARY AND CONFIDENTIAL**	DIMENSIONS ARE APPROXIMATE IN INCHES UNLESS OTHERWISE SPECIFIED	MIRATECH
PROPOSAL NUMBER	THE INFORMATION CONTAINED IN THIS DRAWING IS THE SOLE PROPERTY OF MIRATECH CORPORATION. ANY REPRODUCTION IN PART OR AS A WHOLE WITHOUT THE WRITTEN PERMISSION OF MIRATECH CORPORATION IS PROHIBITED.	DO NOT SCALE DRAWING	**MIRA-MONITOR 2.2-OM Sales Drawing**
SALES ORDER NO.		DRAWN JFS — DATE 06/19/2013	DRAWING MIRA-MONITOR 2.2-OM SD — REV 0
CUSTOMER P.O.		REVIEWED BY CDT — DATE 06/19/2013	SIZE A — SCALE 1:4 — WEIGHT: 38 lb — SHEET 2 OF 2

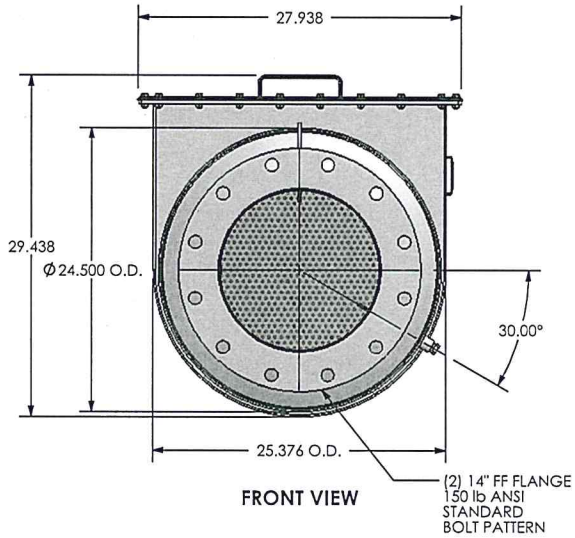

FRONT VIEW

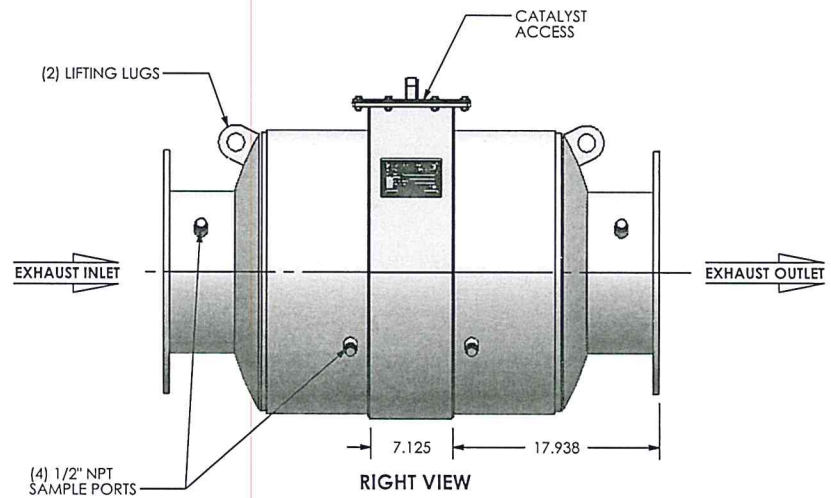

RIGHT VIEW

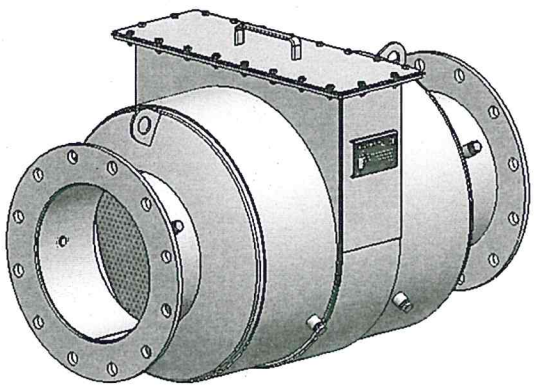

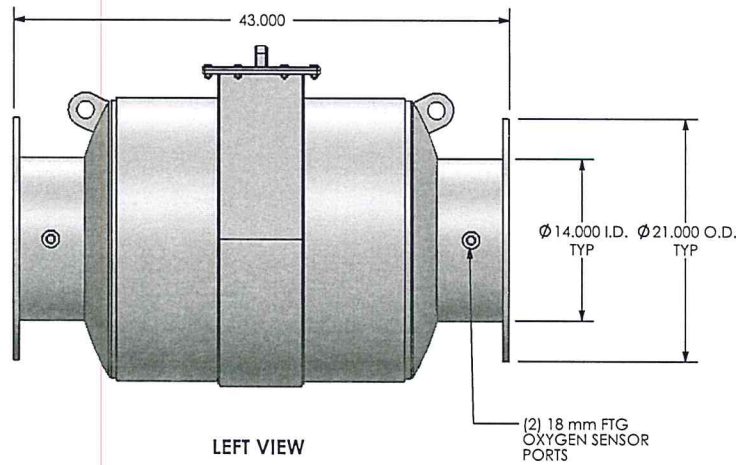

LEFT VIEW

MATERIAL CONSTRUCTION:

-CARBON STEEL

PROJECT NAME	**PROPRIETARY AND CONFIDENTIAL**	DIMENSIONS ARE APPROXIMATE IN INCHES UNLESS OTHERWISE SPECIFIED	MIRATECH				
PROPOSAL NUMBER	THE INFORMATION CONTAINED IN THIS DRAWING IS THE SOLE PROPERTY OF MIRATECH CORPORATION. ANY REPRODUCTION IN PART OR AS A WHOLE WITHOUT THE WRITTEN PERMISSION OF MIRATECH CORPORATION IS PROHIBITED.		**IQ2-26-14 Sales Drawing**				
SALES ORDER NO.		DO NOT SCALE DRAWING					
CUSTOMER P.O.		DRAWN CDT	DATE 12/16/2011	DRAWING IQ2-26-14 SD			REV 0
		REVIEWED BY AJM	DATE 12/19/2011	SIZE A	SCALE 1:16	WEIGHT: 337 lb FULLY LOADED	SHEET 1 OF 1